UNITED STATES PATENT AND TRADEMARK OFFICE

BEFORE THE PATENT TRIAL AND APPEAL BOARD

MYLAN PHARMACEUTICALS INC.,
Petitioner,

v.

SANOFI-AVENTIS DEUTSCHLAND GMBH,
Patent Owner

Case No. IPR2018-01670
U.S. Patent No. 8,679,069

PATENT OWNER'S RESPONSE

TABLE OF CONTENTS

Page

I. INTRODUCTION 1

II. BACKGROUND OF THE TECHNOLOGY 3

III. LEVEL OF ORDINARY SKILL IN THE ART 4

IV. CLAIM CONSTRUCTION 5

A. "tubular clutch" (claim 1) 5

1. "tubular clutch" is not a means-plus-function term. 6

2. The plain and ordinary meaning of "tubular clutch" is "a tubular component that can operate to reversibly lock two components in rotation." 7

V. THE PRIOR ART 8

A. Burroughs 8

B. Steenfeldt-Jensen 10

C. Møller 15

VI. THE CHALLENGED CLAIMS ARE PATENTABLE 15

A. The Challenged Claims Are Patentable Over Ground 1 15

1. Burroughs Does Not Disclose Or Renders Obvious A "Helical Groove Provided Along An Outer Surface Of Said Dose Dial Sleeve" 16

a) Petitioner's Proposed Modification to Burroughs 16

b) Burroughs Does Not Disclose A "Helical Groove Provided Along An Outer Surface Of Said Dose Dial Sleeve" 18

c) Petitioner Does Not Establish A Motivation To Modify Burroughs' Threads To Include A Groove.....18

2. Burroughs Does Not Disclose Or Render Obvious "A Tubular Clutch Located Adjacent A Distal End of Said Dose Dial Grip, Said Tubular Clutch Operatively Coupled to Said Dose Dial Grip" 23

a) Burroughs' Button 32 Is Not "A Tubular Component That Can Operate To Reversibly Lock Two Components In Rotation."....23

b) Burroughs Expressly Discloses A Clutch That Is Not Button 32, Is Not Tubular, And Is Not Located Adjacent To A Distal End Of A Dose Knob 26

B. The Challenged Claims Are Patentable Over Ground 2 27

1. There Is No Disclosure or Suggestion in Steenfeldt-Jensen of an Internally Threaded Driver Tube 27

a) Steenfeldt-Jensen's Disclosure at Column 7, Lines 44-47 is for the First Embodiment, not the Fifth Embodiment.....29

b) Petitioner's Modification to Switch the Non-Circular Opening and Threaded Opening in the Fifth Embodiment Results in an Inferior Pen Injector.....32

(1) Analytical Model.....34

(2) Collar Friction Model.....35

(3) Explanation for Why Petitioner's Modification Results in Higher Friction 38

(4) Additional Problems Caused by Petitioner's Proposed Modification 42

C. The Challenged Claims Are Patentable Over Ground 3 43

1. Møller With Steenfeldt-Jensen Does Not Teach or Render Obvious "a drive sleeve extending along a portion of said piston rod" 43

a) A POSA Would Not Have Considered Connection Bars 12 and Nut 13 Equivalent to Connection Element 112 and Nut 113 46

b) A POSA Would Not Have Expected Connection Bars 12 with Nut 13 Could Be Formed as a Tubular Structure That Encompasses Piston Rod 4 Without Affecting the Device's Operation.....48

2. A POSA Would Not Have Been Motivated to Modify Møller to Include Steenfeldt-Jensen's Externally-Threaded Dose Scale Drum and Internally-Threaded Housing 51

a) A POSA Would Not Have Been Motivated to Combine Moller With Steenfeldt-Jensen's Externally-Grooved Dose Scale Drum 80.....51

b) A POSA Would Not Have Been Motivated to Make the Relied-Upon Combination Due to a Purported Benefit Alleged by Petitioner 54

3. Møller With Steenfeldt-Jensen Does Not Teach or Render Obvious "said dose dial sleeve comprising a helical groove configured to engage a threading provided by said main housing, said helical groove provided along an outer surface of said dose dial sleeve" 55

VII. OBJECTIVE INDICIA OF NONOBVIOUSNESS 57

A. The LANTUS® SoloSTAR® Practices the Challenged Claim of the 069 Patent.....58

B. The LANTUS® SoloSTAR® Satisfied Previously Unresolved Needs for Pen Injectors Due To the Inventions of the 069 Patent.....59

C. The Lantus® SoloSTAR® Received Industry Praise for its Patented Features.....62

D. The Commercial Success of the LANTUS® SoloSTAR® Is Attributable to the Inventions of the 069 Patent 64

VIII. CONCLUSION.....68

TABLE OF AUTHORITIES

Page(s)

Cases

Acorda Therapeutics, Inc. v. Roxane Labs., Inc.,
903 F.3d 1310 (Fed. Cir. 2018), *pet. for cert filed*, No. 18-1280 (U.S. Apr. 8, 2019) 67

Belden Inc. v. Berk-Tek LLC,
805 F.3d 1064 (Fed. Cir. 2015) 19

Eurand, Inc. v. Mylan Pharms., Inc. (In re Cyclobenzaprine Hydrochloride Extended-Release Capsule Patent Litig.),
676 F.3d 1063 (Fed. Cir. 2012) 29

General Elec. Co. v. United Techs. Corp.,
IPR2017-00428, Paper No. 38 (P.T.A.B. June 22, 2018) 52

In re Gordon,
733 F.2d 900 (Fed. Cir. 1984) 43

In re GPAC,
57 F.3d 1573 (Fed. Cir. 1995) 5

Graham v. John Deere Co. of Kan. City,
383 U.S. 1 (1966) 57, 58

Kinetic Concepts, Inc. v. Smith & Nephew, Inc.,
688 F.3d 1342 (Fed. Cir. 2012) 18

KSR Int'l Co. v. Teleflex Inc.,
550 U.S. 398 (2007) 55

Lupin Ltd. v. Senju Pharm. Co.,
No. IPR2015-01100, Paper 70 (P.T.A.B. Sep. 12, 2016) 57

Medichem, S.A. v. Rolabo, S.L.,
437 F.3d 1157 (Fed. Cir. 2006) 53

Personal Web Techs., LLC v. Apple, Inc.,
848 F.3d 987 (Fed. Cir. 2017) 45

Plas-Pak Indus. v. Sulzer Mixpac AG,
600 F. App'x 755 (Fed. Cir. 2015) 43

Polaris Indus., Inc. v. Arctic Cat, Inc.,
882 F.3d 1056 (Fed. Cir. 2018)..... 19, 52, 54

Transocean Offshore Deepwater Drilling Inc. v. Maersk Drilling USA, Inc.,
699 F.3d 1340 (Fed. Cir. 2012)..... 58

Unigene Labs., Inc. v. Apotex, Inc.,
655 F.3d 1352 (Fed. Cir. 2011)..... 50

WBIP, LLC v. Kohler Co.,
829 F.3d 1317 (Fed. Cir. 2016)..... 58

Williamson v. Citrix Online, LLC,
792 F.3d 1339 (Fed. Cir. 2015)..... 6

Other Authorities

37 CFR § 42.6(a)(2)(ii)..... 71

37 CFR § 42.6(a)(2)(iii) 71

37 CFR § 42.8..... 71

37 CFR § 42.24(a)(1)(i)..... 71

M.P.E.P. 2141.03..... 5

M.P.E.P. 2143 45

EXHIBIT LIST

Exhibit #	Description
2001	Press Release, "Mylan Enhances Partnership with Biocon through Strategic Collaboration for Insulin Products," Feb. 13, 2013 (PR Newswire), available at http://newsroom.mylan.com/press-releases?item=122834
2002	Press Release, "Mylan Commences Phase III Clinical Trials for its Generic Version of Advair Diskus® and Insulin Analog to Lantus®," Sept. 16, 2014 (PR Newswire), available at http://newsroom.mylan.com/press-releases?item=123251
2003	Press Release, "Mylan and Biocon Present Clinical Data on Insulin Glargine at the American Diabetes Association's 77th Scientific Sessions," June 10, 2017 (PR Newswire), available at http://newsroom.mylan.com/2017-06-10-Mylan-and-Biocon-Present-Clinical-Data-on-Insulin-Glargine-at-the-American-Diabetes-Associations-77th-Scientific-Sessions
2004	Complaint for Patent Infringement, *Sanofi-Aventis U.S. LLC, Sanofi-Aventis Deutschland GmbH, and Sanofi Winthrop Industrie v. Merck Sharp & Dohme Corp.*, C.A. No. 1-16-cv-00812-RGA (D. Del.), Dkt. No. 1
2005	Stipulation and Proposed Order, *Sanofi-Aventis U.S. LLC v. Mylan, N.V.*, Civil Action No. 17-9105-SRC-SLW (D.N.J. Feb 5, 2018), Dkt. No. 45
2006	Complaint for Patent Infringement, *Sanofi-Aventis U.S. LLC et al. v. Mylan N.V. et al.*, Case No. 2:17-cv-09105-SRC-CLW (D.N.J. Oct. 24, 2017), Dkt. No. 1
2007	Excerpts from Defendants' Invalidity Contentions, dated Jan. 25, 2018, *Sanofi-Aventis U.S. LLC et al. v. Mylan N.V. et al.*, Case No. 2:17-cv-09105-SRC-CLW (D.N.J.)
2008	Mylan GMBH's Exhibit D to Invalidity Contentions, dated Jan. 25, 2018, *Sanofi-Aventis U.S. LLC et al. v. Mylan N.V. et al.*, Case No. 2:17-cv-09105-SRC-CLW (D.N.J.)
2009	Excerpts from Mylan GMBH's Amended Invalidity Contentions, dated April 25, 2018, *Sanofi-Aventis U.S. LLC et al. v. Mylan N.V. et al.*, Case No. 2:17-cv-09105-SRC-CLW (D.N.J.)
2010	Mylan GMBH's Exhibit D to Amended Invalidity Contentions, dated April 25, 2018, *Sanofi-Aventis U.S. LLC et al. v. Mylan N.V. et al.*, Case No. 2:17-cv-09105-SRC-CLW (D.N.J.)

Exhibit #	Description
2011	Aug. 13, 2018 Service of Sanofi's Responses to Mylan's Amended Contentions, *Sanofi-Aventis U.S. LLC et al. v. Mylan N.V. et al.*, Case No. 2:17-cv-09105-SRC-CLW (D.N.J.)
2012	MP4 file of Sanofi's Patented Pen animation
2013	Excerpts from McGraw Hill Dictionary of Scientific and Technical Terms (Sixth edition, McGraw-Hill 2003), p. 972 and 1873
2014	Excerpts from Merriam-Webster's Collegiate Dictionary (10th edition, Merriam-Webster, Inc. 2001), p. 538
2015	The New Oxford American Dictionary (Oxford University Press 2001), p. 789-90
2016	Excerpt from Joint claim construction statement, Ex. A, dated October 8, 2018, Sanofi-Aventis U.S. LLC et al. v. Mylan N.V. et al., Case No. 2:17-cv-09105-SRC-CLW (D.N.J.)
2017	Excerpts from Transcript, Conference Call dated Aug. 2, 2018, *Sanofi-Aventis U.S. LLC et al. v. Mylan N.V. et al.*, Case No. 2:17-cv-09105-SRC-CLW (D.N.J.) (confidentiality designation removed)
2018	Report of the Local Patent Rules Committee, Explanatory Notes for 2016 Amendments
2019	Defendants' Opposition to Plaintiffs' Motion to Stay dated Nov. 22, 2017, *Sanofi-Aventis U.S. LLC et al. v. Mylan N.V. et al.*, Case No. 1:17-cv-00181-IMK (N.D. W. Va.), Dkt. No. 44
2020	Joint Proposed Discovery Plan dated Dec. 14, 2017, *Sanofi-Aventis U.S. LLC et al. v. Mylan N.V. et al.*, Case No. 2:17-cv-09105-SRC-CLW (D.N.J.)
2021	Letter from A. Calmann to Judge Waldor dated Apr. 24, 2018, *Sanofi-Aventis U.S. LLC et al. v. Mylan N.V. et al.*, Case No. 2:17-cv-09105-SRC-CLW (D.N.J.), Dkt. No. 90
2022	Motion to Expedite Defendants' Motion Requesting an Expedited Scheduling Conference dated Nov. 22, 2017 , *Sanofi-Aventis U.S. LLC et al. v. Mylan N.V. et al.*, Case No. 1:17-cv-00181-IMK (N.D. W. Va.), Dkt. No. 46
2023	Initial Planning Meeting Report and Discovery Proposals dated Dec. 22, 2017, *Sanofi-Aventis U.S. LLC et al. v. Mylan N.V. et al.*, Case No. 1:17-cv-00181-IMK (N.D. W. Va.), Dkt. No. 61

Exhibit #	Description
2024	Transcript of Motion / Scheduling Conference dated Jan. 3, 2018, *Sanofi-Aventis U.S. LLC et al. v. Mylan N.V. et al.*, Case No. 1:17-cv-00181-IMK (N.D. W. Va.), Dkt. No. 64
2025	Transcript, Conference Call for Case IPR2018-01675, -01676, -01678, -01680 (P.T.A.B. Feb. 5, 2019)
2026	International Patent WO 99/38554
2027	Animation depicting Møller's first embodiment
2028	Animation depicting Møller's second embodiment
2029-2099	*Reserved*
2100	Leinsing Deposition Exhibit 2100: Thomas van der Burg, *Injection Force of SoloSTAR® Compared with Other Disposable Insulin Pen Devices at Constant Volume Flow Rates*, J. of Diabetes Sci. and Tech., Vol. 5, Issue 1, 150-155 (Jan. 2001)
2101	Leinsing Deposition Exhibit 2101: Estelle Davis, et. al., *An evaluation of prefilled insulin pens: a focuse on the Next Generation FlexPen®*, Med. Devices: Evidence & Research, 41-50 (2010:3)
2102	Leinsing Deposition Exhibit 2102: Hand drawings
2103	Leinsing Deposition Exhibit 2103: Annotations of Figures 6-15 of Burroughs
2104	Leinsing Deposition Exhibit 2104: Annotations of Figures 5-8 of the 486 Patent
2105	Leinsing Deposition Exhibit 2105: Hand drawings
2106	Leinsing Deposition exhibit 2106: Annotations of Figures 11 and 12 of Giambattista
2107	Declaration of Alexander Slocum, Ph.D.
2108	Curriculum Vitae of Alexander Slocum, Ph.D.
2109	Declaration of Henry R. Grabowski, Ph.D.
2110	Curriculum Vitae of Henry R. Grabowski, Ph.D.
2111	Declaration of Dr. Robin S. Goland
2112	Curriculum Vitae of Dr. Robin S. Goland
2113	Bradley M. Wright et al., *A Review Of Insulin Pen Devices And Use In The Elderly Diabetic Population*, 3 Clinical Medicine Insights: Endocrinology & Diabetes 54-63 (2010)
2114	Teresa L. Pearson, *A-Practical-Review-of-Insulin-Pen-Devices*, EMJ Diabet., 58-64 (2014:2)

Exhibit #	Description
2115	Arthritis & Diabetes, *What do diabetes and arthritis have in common? Plenty.*, https://www.arthritis.org/living-with-arthritis/comorbidities/diabetes-and-arthritis/
2116	Andreas Bode, *Development of the SoloSTAR insulin pen device design verification and validation*, 6 Expert Opinion on Drug Delivery 103-112 (2008)
2117	Sanofi's Patented Pen animation
2118	John Carter, *Usability, Participant Acceptance, and Safety of a Prefilled Insulin Injection Device in a 3-Month Observational Survey in Everyday Clinical Practice in Australia, J. Diabetes Sci & Tech., Vol. 3, Issue 6, 1425-1438 (Nov. 2009)*
2119	Sherwyn Schwartz, *Correct Use of a New Reusable Insulin Injection Pen by Patients with Diabetes: A Design Validation Study*, 4 J. Diabetes Sci. and Tech. 1229-1235 (2010)
2120	*Reserved*
2121	DBA Design Effectiveness Awards 2009
2122	SoloSTAR Disposable Pen Injector (The Grand Prix Oct. 22, 2009)
2123	Arnd Friedrichs et al., *Dose Accuracy and Injection Force of Different Insulin Glargine Pens*, 7 J. Diabetes Sci. and Tech. 1346-1353 (2013)
2124	Stacey A. Seggelke et al., *Effect of Glargine Insulin Delivery Method (Pen Device Versus Vial/Syringe) on Glycemic Control and Patient Preferences in Patients with Type 1 and Type 2 Diabetes*, 20 ENDOCRINE PRACTICE, 536, 536, 538–539 (2014)
2125	Julia Pfutzner et al., *Evaluation of Dexterity in Insulin-Treated Patients with Type 1 and Type 2 Diabetes Mellitus*, 5 J. Diabetes Sci. and Tech. 158-165 (2011)
2126	Jerome S. Fischer et al., *United States Patient Preference and Usability for the New Disposable Insulin Device Solostar® versus Other Disposable Pens*, 2 JOURNAL OF DIABETES SCIENCE AND TECHNOLOGY 1157-1160 (2008)
2127	U.S. Provisional Patent Application 60/073820
2128	Samita Garg et al., *Insulin glargine and glulisine SoloSTAR pens for the treatment of diabetes*, 5 Expert Rev. Med. Devices 113-123 (2008)

Exhibit #	Description
2129	Nicolae Hancu et al., *A Pan-European and Canadian Prospective Survey to Evaluate Patient Satisfaction with the SoloSTAR Insulin Injection Device in Type 1 and Type 2 Diabetes*, 5 J. Diabetes Sci. and Tech. 1224-1234 (2011)
2130	Norbert Hermanns, Bernhard Kulzer & Thomas Haak, *Dosing Accuracy with a Novel Pen Device (SoloSTAR) as Performed by Patients with Diabetes in a Clinical Setting*, 10 Diabetes Tech. & Threapeutics 322-327 (2008)
2131	ISO 11608-1, Pen-injectors for medical use (1st Ed. Dec. 15, 2000)
2132	Meike Krzywon et al., *Study on the Dosing Accuracy of Commonly Used Disposable Insulin Pens*, 14 Diabetes Tech. & Therapeutics 804-809 (2012)
2133	Lantus SoloSTAR Pen Guide
2134	Arlan L. Rosenbloom, *Limitation of Finger Joint Mobility in Diabetes Mellitus*, 3 J. Diabetic Complications 77-87 (1989)
2135	Douglas Merritt et al., *Dose Accuracy and Injection Force of Disposable Pens Delivering Pramlintide for the Treatment of Diabetes*, 4 J. Diabetes Sci. and Tech. 1438-1446 (2010)
2136	Novo Nordisk Form 6-K (Feb. 9, 2009)
2137	Novo Nordisk History
2138	W. Schady et al, *Observations on Severe Ulnar Neuropathy in Diabetes*, 12 J Diabetes and Its Complications 128-132 (1998)
2139	Alfred Penfornis & Kristian Horvat, *Dose Accuracy Compariosn Between SoloSTAR and FlexPen at Three Different Dose Levels*, 10 Diabetes Tech. & Therapeutics 359-362 (2008)
2140	Riccardo Perfetti, *Reusable and Disposable Insulin Pens for the Treatment of Diabetes: Understanding the Global Differences in User Preference and an Evaluation of Inpatient Insulin Pen Use*, 12 Diabetes Tech. & Therapeutics 79-85 (2010)
2141	John Shelmet et al., *Preference and resource utilization in elderly patients: InnoLet versus vial/syringe*, 63 Diabetes Res. and Clinical Prac. 27-35 (2004)
2142	*Prix Galien USA Announces 2009 Final Candidates* (Prix Galien USA, August 7, 2009)

Exhibit #	Description
2143	Thomas Haak et al., *Comparison of Usability and Patient Preference for the New Disposable Insulin Device SoloStar Versus FlexPen, Lilly Disposable Pen, and a Prototype Pen: An Open-Label Study*, 29 CLINICAL THERAPEUTICS, 650-660 (2007)
2144	Alastair Clarke & Geralyn Spollett, *Dose accuracy and injection force dynamics of a novel disposable insulin pen*, 4 EXPERT OPINION ON DRUG DELIVERY 165-174 (2007)
2145	US Lantus SoloSTAR Launch Book, 2007, PTX-0705, Document bates stamped SANOFI_00232909-45
2146	Lantus COMPASS Study Report (Nov. 29, 2007), PTX-0739, Document bates stamped SANOFI3_90330807-1025
2147	Steenfeldt-Jensen 5th Embodiment Animation
2148	Steenfeldt-Jensen 1st Embodiment Animation
2149	Steenfeldt-Jensen 2nd Embodiment Animation
2150	Steenfeldt-Jensen 5th Embodiment Thread and Slot Animation
2151	Steenfeldt-Jensen 5th Embodiment vs. Proposed Modification Animation
2152	Steenfeldt-Jensen 5th Embodiment vs. Proposed Modification Collar Friction Animation
2153	International Patent Application WO999038554A1
2154	*Reserved*
2155	*Reserved*
2156	*Reserved*
2157	*Reserved*
2158	Geralyn Spollett, *Insulin Devices, Addressing Barriers to Insulin Therapy With the Ideal Pen, 957-967 (The Diabetes EDUCATOR)*
2159	Serpil Savas et al., *The effects of the diabetes related soft tissue hand lesions and the reduced hand strength on functional disability of hand in type 2 diabetic patients*, 77 Diabetes Res. and Clinical Prac. 77-83 (2007)
2160	Jean-Louis Selam, *Evolution of Diabetes Insulin Delivery Devices*, 4 J. Diabetes Sci. and Tech. 505-513 (2010)
2161	SoloSTAR Principles of Operation, PTX-0553, Document bates stamped SANOFI_00406383-94
2162	Sanofi Patent Drive Sleeve and Piston Rod Animation
2163	Deposition of Karl R. Leinsing, dated June 3, 2019 for IPR2018-01675, -01676, -01678, -01680

Exhibit #	Description
2164	Deposition of Karl R. Leinsing, dated June 4, 2019 for IPR2018-01675, -01676, -01678, -01680
2165	Opinion and Order regarding Claim Construction, *Sanofi-Aventis U.S. LLC v. Mylan, N.V.*, Civil Action No. 17-9105-SRC-SLW (D.N.J. May 9, 2019), Dkt. No. 319
2166	Memorandum and Order regarding Claim Construction, *Sanofi-Aventis U.S. LLC v. Merck*, No. 16-812-RGA (D. Del. Jan. 12, 2018), Dkt. No. 192
2167	Giambattista Animation (1)
2168	Giambattista Animation (2)
2169	U.S. Patent No. 4,648,872
2170	U.S. Patent No. 4,747,824
2171	U.S. Patent No. 6,248,093
2172	Karl R. Leinsing Declaration in *Hologic, Inc. v. Minerva Surgical, Inc., No. 15-1031* (D. Del. Jan. 26, 2018), Dkt. No. 309
2173	Bruce A. Perkins, David Olaleye & Vera Bril, *Carpal Tunnel Syndrome in Patients With Diabetic Polyneuropathy*, 25 Diabetes Care 565-569 (2002)
2174	Jefferson Becker et al., *An evaluation of gender, obesity, age and diabetes mellitus as risk factors for carpal tunnel syndrome*, 113 Clinical Neurophysiology 1429-1434 (2002)
2175	A. Pfutzner et al., *Prefilled insulin device with reduced injection force: patient perception and accuracy*, 24 Current Med. Res. and Opinion 2545-2549 (2008)
2176	Ercan Cetinus et al., *Hand grip strength in patients with type 2 diabetes mellitus*, Diabetes Res. and Clinical Prac. 1-9 (2005)
2177	Ragnhild I. Cederlund et al., *Hand disorders, hand function, and activities of daily living in elderly men with type 2 diabetes*, 23 J. Diabetes and Its Complications 32-99 (2009)
2178	Shubha Gundmi et al., *Hand dysfunction in type 2 diabetes mellitus: Systematic review with meta-analysis*, 61 Annals of Physical and Rehabilitation Med. 99-104 (2018)
2179	Joule J. Li et al., *Muscle grip strength predicts incident type 2 diabetes: Population-based cohort study*, 65 Metabolism Clinical and Experimental 883-892 (2016)

Exhibit #	Description
2180	Considering Insulin Pens for Routine Hospital Use - Consider This... (ISMP article), https://www.ismp.org/resources/considering-insulin-pens-routine-hospital-use-consider
2181	Trigger Finger Overview (Mayo Clinic), https://www.mayoclinic.org/diseases-conditions/trigger-finger/symptoms-causes/syc-20365100
2182	Bone and joint problems associated with diabetes (Mayo Clinic), https://www.mayoclinic.org/diseases-conditions/diabetes/in-depth/diabetes/art-20049314
2183	Peripheral Neuropathy (Mayo Clinic), https://www.mayoclinic.org/diseases-conditions/peripheral-neuropathy/symptoms-causes/syc-20352061
2184	Charles E. Buban, *A pen that seeks to improve diabetes care*, INQUIRER.NET (2008), Document Bates stamped SANOFI_00006282-84
2185	"*Sanofi-aventis' SoloSTAR(R) Insulin Pen for Lantus and Apidra Receives the Prestigious GOOD DESIGN Award"*, (PR Newswire Feb. 14), Document Bates stamped SANOFI_00006299-301
2186	Select Injectable Insulin Drugs Approved by the FDA in the U.S.
2187	U.S. Dollar Sales of Lantus SoloSTAR
2188	U.S. New Prescriptions of Lantus SoloSTAR
2189	U.S. Total Prescriptions of Lantus SoloSTAR
2190	U.S. Share of Sales by Drugs in the Lantus Franchise
2191	Formulary Placement of Long-Acting Insulin Pen Products: Commercial Plans
2192	Formulary Placement of Long-Acting Insulin Pen Products: Medicare Plans
2193	Formulary Placement of Long-Acting Insulin Pen Products: Medicaid Plans
2194	Formulary Placement of Long-Acting Insulin Pen Products in Healthcare Exchanges
2195	U.S. Share of Long-Acting Pens Among All Pens
2196	U.S. Dollar Sales of Long-Acting Pens
2197	U.S. New Prescriptions of Long-Acting Pens
2198	U.S. Total Prescriptions of Long-Acting Pens
2199	U.S. Share of Long-Acting Pen Products

Exhibit #	Description
2200	Yuzu Sato et al., *Clinical Aspects of physical exercise for diabetes/metabolic syndrome*, 77S Diabetes Research and Clinical Practice S87 (2007)
2201	2007 Good Design Award from The Chicago Athenaeum: Museum of Architecture and Design
2202	*Reserved*
2203	U.S. Total Marketing Expenditure of Long Acting Insulin Franchises
2204	U.S. Total Marketing Expenditures of Long-Acting Insulin Pens
2205	U.S. Marketing-to-Sales Ratios of Select Injectable Insulin Drugs
2206	Møller First Embodiment Animation
2207	Møller Second Embodiment Animation
2208	Press Release, *Lantus / Apdira SoloSTAR help to improve patient satisfaction* (June 27, 2011), Document bates stamped SANOFI_00179886-88
2209	Henry Grabowski, John Vernon & Joseph A. DiMasi, *Returns on Research and Development for 1990s New Drug Introductions*, 20 Pharmacoeconomics 15 (2002)
2210	Julie M. Donohue, Marisa Cevasco & Meredith B. Rosenthal, *A Decade of Direct-to-Consumer Advertising of Prescription Drugs*, 357 N. Engl. J. Med. 673 (2007)
2211	Collar Friction Model Demonstrator Animation
2212	Excerpts from Ernest Rabinowicz, Friction And Wear of Materials, 2nd Edition, 68-70 (John Wiley & Sons, Inc. 1995)
2213	*Reserved*
2214	Excerpts from Alexander H. Slocum, *Precision Machine Design*, 706-709 (Prentice-Hall, Inc. 1992)
2215	Collar Friction Model Demonstration 1
2216	Collar Friction Model Demonstration 2
2217	Collar Friction Model Demonstration 3
2218	SoloSTAR Dial Inject Video

I. INTRODUCTION

Petitioner's obviousness grounds fail to render the challenged claim obvious because each ground fails to disclose or render obvious multiple limitations of the challenged claim.

First, in Ground 1, Petitioner admits that its prior art reference, U.S. Patent No. 6,221,046 ("Burroughs"), does not disclose the required "helical groove" on an outer surface of a dose dial sleeve. Petition at 30. Petitioner proposes to modify Burroughs to include a helical groove by including additional threads on the dose dial sleeve. This modification, however, would introduce significant complications with dose dispensing. Moreover, even if modified to include additional threads, Petitioner's modification does not disclose a tubular clutch, as required by the challenged claim.

Second, in Ground 2, Petitioner concedes that Steenfeldt-Jensen fails to disclose a drive sleeve that engages with a piston rod via a threaded connection as required by the challenged claims. Petitioner argues obviousness, but a POSA would not have been motivated to make Petitioner's proposed modification because it renders Steenfeldt-Jensen's device inoperable for its intended purpose.

Third, in Ground 3, Petitioner relies on Møller combined with Steenfeldt-Jensen to provide an internally-threaded drive sleeve. Petitioner points to Møller's connection bars 12 and nut 13 as the drive sleeve, but this component is not a

sleeve as properly construed. Petitioner nonetheless argues that a POSA would have expected that connection bars 12 and nut 13 ***could*** be formed as a sleeve, but fails to explain what would motivate a POSA to form connection bars 12 and nut 13 as a sleeve. Additionally, the combination of Møller and Steenfeldt-Jensen fails to disclose an externally-threaded dose dial sleeve, and Petitioner fails to show that a POSA would have been motivated to combine the references to include such a sleeve.

Fourth, secondary indicia of non-obviousness support the conclusion that the challenged claim is patentable over Petitioner's obviousness grounds. Specifically, the 069 Patent addressed a long-felt, but unmet need in the insulin pen injector industry – the need for an injection pen with reduced injection force. The commercial embodiment of the 069 Patent, Sanofi's LANTUS® SoloSTAR®[1], achieved critical acclaim and overwhelming commercial success that is directly attributable to the 069 Patent.

[1] LANTUS® is the commercial name for Sanofi's glargine formulation, and LANTUS® SoloSTAR® is the commercial name for LANTUS® packaged in the SoloSTAR® pen injector.

II. BACKGROUND OF THE TECHNOLOGY

The 069 Patent concerns "pen-type" injectors such pen injectors used by diabetic patients to self-administer insulin. Ex. 1001, 1:13-17; Ex. 2107, ¶ 64.

At the time of the 069 Patent, pen-type injectors were already known in the art. For example, Steenfeldt-Jensen reference describes five pen injector embodiments, and its fifth embodiment closely corresponds to the Novo Nordisk FlexPen that was commercially available at the time. Ex. 1014, Figs. 1-17, Ex. 2107, ¶ 28.

Prior art injection pens, however, had limitations. The FlexPen (*i.e.*, Steenfeldt-Jensen's commercial embodiment), for example, suffered from a relatively high injection force. Ex. 2107, ¶ 29. Higher injection force is problematic for patients lacking dexterity and strength—*e.g.*, diabetic patients. *Id.*, ¶¶ 47-53.

Developing a new pen injector to address prior art limitations is not as simple as substituting one component or feature for another. Ex. 2107 ¶ 55. A change intended to improve one aspect of a device can negatively impact other aspects, and one must consider whether these tradeoffs result in a worse design overall. *Id*. In pen injectors, changes that increase the required injection force impair the device's ease-of-use, and thus, are not worth pursuing as they would worsen the patient's experience and decrease the likelihood that the patient would

strictly comply with their medication regime. This in turn accelerates the progress of their disease. Ex. 2107, ¶¶ 36, 44.

The FlexPen, for example, required a high injection force to dispense medication. Ex. 2175. It took Novo Nordisk years to modify the FlexPen to address this issue. Indeed, the original FlexPen was introduced in 2001 (*see* Ex. 2137 at 53, 66, Ex. 2136 at 22), but it was not until late 2008, five years after the 069 Patent's priority date and a year after SoloSTAR® launched, that Novo Nordisk introduced the New Generation FlexPen (NGFP), with reduced injection force requirements (*see* Ex. 2136 at 71).

The 069 Patent's inventors successfully balanced these competing design considerations and produced a novel, non-obvious mechanical arrangement that results in an improved pen injector. SoloSTAR®, which practices claim 1 of the 069 Patent, has been a successful product because of these improvements. Numerous studies have touted its ease-of-use, particularly its low injection force. Ex. 2116, Ex. 2123, Ex. 2126.

III. LEVEL OF ORDINARY SKILL IN THE ART

The correct level of ordinary skill is defined by a person who understands the mechanical elements (e.g., lead screws, clutches, gears) used in drug injection delivery devices as well as the principles governing the interactions of such mechanical elements, and further understands the basics of device design and

manufacturing. That person will have a bachelor's degree in mechanical engineering or an equivalent degree. Ex. 2107, ¶ 102. Patent Owner's proposed level of ordinary skill reflects the educational level of workers in the field and the sophistication of the technology. *Id.*; *In re GPAC*, 57 F.3d 1573, 1579 (Fed. Cir. 1995); M.P.E.P. 2141.03. Patent Owner's level of ordinary skill is similar to that proposed by Petitioner. Regardless, any slight differences do not affect the arguments made below.

IV. CLAIM CONSTRUCTION

For the purposes of this IPR, Sanofi believes it is only necessary to address the constructions of "tubular clutch."

A. "tubular clutch" (claim 1)

Petitioner's Construction	Patent Owner's Construction
Means-plus-function <u>Function</u>: during dose setting, it clutch[es], i.e., coupling and decoupling a movable component from another component, or it operates to reversibly lock two components in rotation. <u>Corresponding Structure</u>: component 60 in Figures 1, 5-11 of the 069 Patent	a tubular component that can operate to reversibly lock two components in rotation

The Board should construe "tubular clutch" to mean "a tubular component that can operate to reversibly lock two components in rotation."

1. "tubular clutch" is not a means-plus-function term.

In the related District of New Jersey litigation (the "Litigation")[2], the court rejected Petitioner's contention that "clutch" is a means-plus-function limitation, finding that Petitioner had not demonstrated "that 'clutch' fails to recite sufficiently definite structure or else recites function without reciting sufficient structure for performing that function." Ex. 2165 at 12. Likewise, the Petition in this proceeding does not include any support to overcome the presumption against applying means-plus-function. *Williamson v. Citrix Online, LLC*, 792 F.3d 1339, 1349 (Fed. Cir. 2015). Indeed, the Petition includes *no* analysis of whether a POSA would have understood the term "tubular clutch," which clearly does not include the word "means," to recite sufficiently definite structure or to recite function without reciting sufficient structure for performing the claimed function. Accordingly, Petitioner's contention that "tubular clutch" is means-plus-function should be rejected.

[2] All defendants involved in the Litigation are real parties-in-interest or privies of Petitioner.

2. The plain and ordinary meaning of "tubular clutch" is "a tubular component that can operate to reversibly lock two components in rotation."

In the Litigation, the Court further considered the ordinary meaning for the term "clutch," and determined that the ordinary meaning of clutch is "a component that can operate to reversibly lock two components in rotation." Ex. 2165 at 13. Patent Owner agrees that the ordinary meaning of the term "clutch" is "a component that can operate to reversibly lock two components in rotation." Petitioner's proposed construction also requires the function of reversibly locking two components in rotation. Thus, there is *no* dispute that "tubular clutch" should be construed to require "a tubular component that can operate to reversibly lock two components in rotation." Because this construction is the term's plain and ordinary meaning, it is also the correct construction under the broadest reasonable interpretation standard.

Petitioner also proposed that a "tubular clutch" is a structure that "during dose setting, it clutch[es], i.e., coupling and decoupling a movable component from another component," Petition at 16-17, but the District of New Jersey rejected this for two reasons. First, the District of New Jersey rejected "during dose setting," determining that it cannot be part of the ordinary meaning of "clutch." Ex. 2165 at 13. Second, the District of New Jersey rejected as inconsistent with the plain and

ordinary meaning, the claim construction proposals requiring a structure that "couples and decouples" two components. Ex. 2165 at 10-11.

As discussed below, Burroughs does not disclose or render obvious a tubular component that can operate to reversibly lock two components in rotation, and therefore properly construing the term "tubular clutch" according to its ordinary meaning is dispositive of Ground 1.

V. THE PRIOR ART

A. Burroughs

Burroughs relates to a multi-use injector pen. Ex. 1013, Abstract.

Importantly, Burroughs discloses that a key advantage of its injector pen over prior art designs is a "dosage lockout mechanism" that prevents inadvertent delivery of medication. *Id*., 4:29-31. Specifically, the threads 110, 112 on the dial mechanism 34 are forced into the groove 158 in housing parts 24 and 26 during dose-setting by button surface 57, thereby preventing the dial mechanism 34 from moving axially forward and dispensing the dosage. *Id*., 11:1-6. An illustration is depicted below.

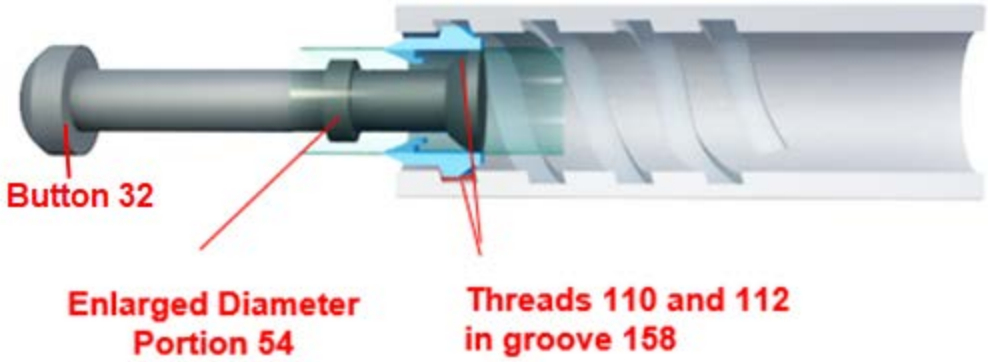

To "unlock" the dial mechanism 34 to allow a dose to be dispensed, threads 110, 112 must be retracted from groove 158. *Id*., 11:5-6. This occurs when the user depresses button 32, which moves button 32 axially forward, bringing enlarged diameter portion 54 into contact with ramped surfaces 96 of legs 102, 104. *Id*., 7:47-52; 8:25-30. Legs 102, 104 are driven downward, which retracts threads 110, 112 from groove 158. Ex. 2107, ¶¶ 134-135.

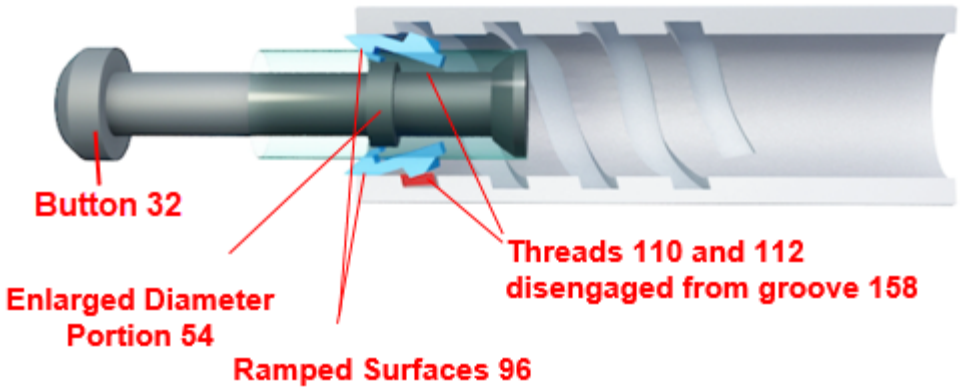

Fig. 9, below depicts a side view of the legs 102, 104 and threads 110, 112. Fig. 14 depicts enlarged diameter portion 54.

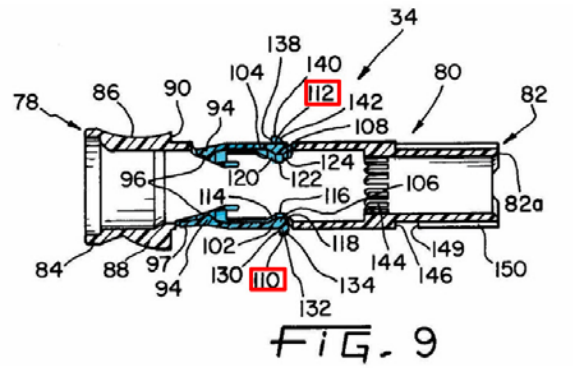

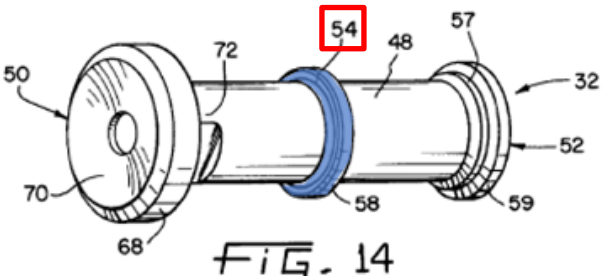

Ex. 1013, Fig. 9 and 14 (highlighted).

B. Steenfeldt-Jensen

Steenfeldt-Jensen is a U.S. patent. Its PCT counterpart application, WO99/38554 (Ex. 2026), was disclosed during prosecution of the 069 Patent and is cited by the 069 Patent. Ex. 1014 (claiming priority to DK199800130), Ex. 2026 (same), Ex. 1006 at 0149 (listing WO99/38554).

Steenfeldt-Jensen discloses five distinct pen injector embodiments. Ex. 1014, Figs. 1-17. These pen injectors comprise different components and arrangements, as shown below, and operate differently. Ex. 2148 (animation of the first embodiment), 2149 (animation of the second embodiment), 2147 (animation of the fifth embodiment); Ex. 2107, ¶ 137.

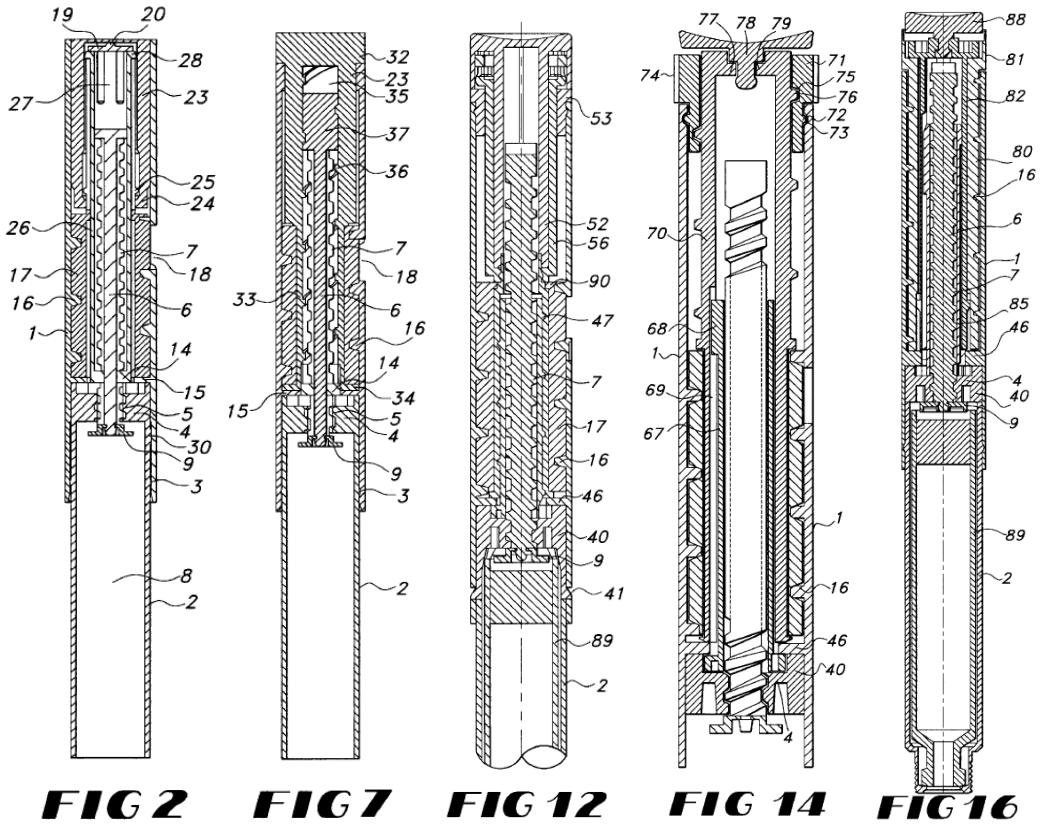

Ex. 1014, Figs. 2, 7, 12, 14, and 16.

Petitioner relies on the fifth embodiment (Ex. 1014 at 11:6-12:16, Figs. 15-17) to argue that Steenfeldt-Jensen discloses or renders obvious the challenged claims. Petition at 26-71. The fifth embodiment, depicted below, comprises ampoule holder 2 (turquoise), ampoule (or cartridge) 89 (dark blue), pressure foot 9, member 40 (orange), driver tube 85 (red), piston rod 6 (yellow), housing 1 (grey), scale drum 80 (light green), bushing 82 (light blue), and injection button 88 (purple).

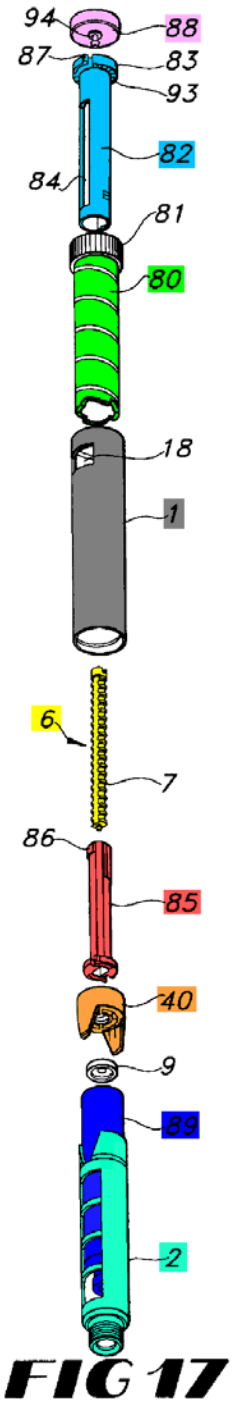

Ex. 1014, Fig. 17.

Significant to this Response, Steenfeldt-Jensen's fifth embodiment includes non-threaded driver tube 85 and a threaded piston rod 6 having a non-circular

cross-section. "The piston rod has a not round cross-section and fits through the driver tube bore which has a corresponding not round cross-section. This way rotation is transmitted [from the driver tube to the piston rod] whereas the piston rod is allowed to move longitudinally through the driver tube." *Id*., 11:15-19. This non-circular cross-section is necessary in the fifth embodiment because the piston rod 6 (yellow) rotates with driver tube 85 (red). The piston rod's non-circular shape fits within the driver tube's non-circular bore, thus rotationally coupling the components while allowing them to move axially relative to one another. *See* Figs. below; Ex. 2150 (animation depicting the threaded opening of member 40 and slotted opening of driver tube 85); Ex. 2107, ¶ 145.

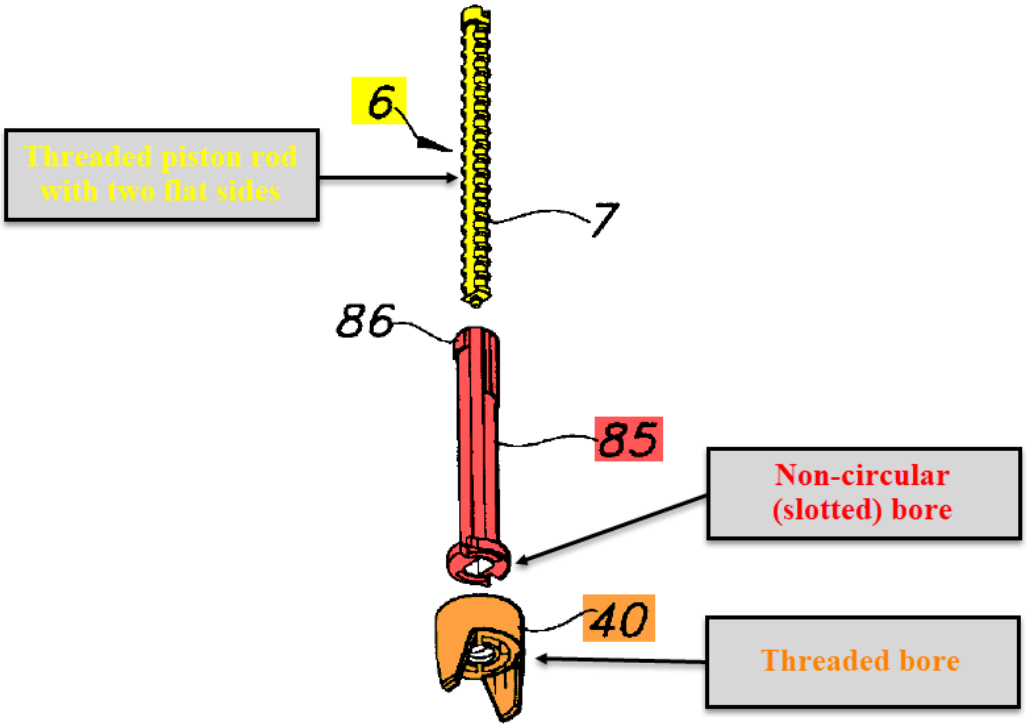

Ex. 1014, Fig. 17 (cropped and annotated).

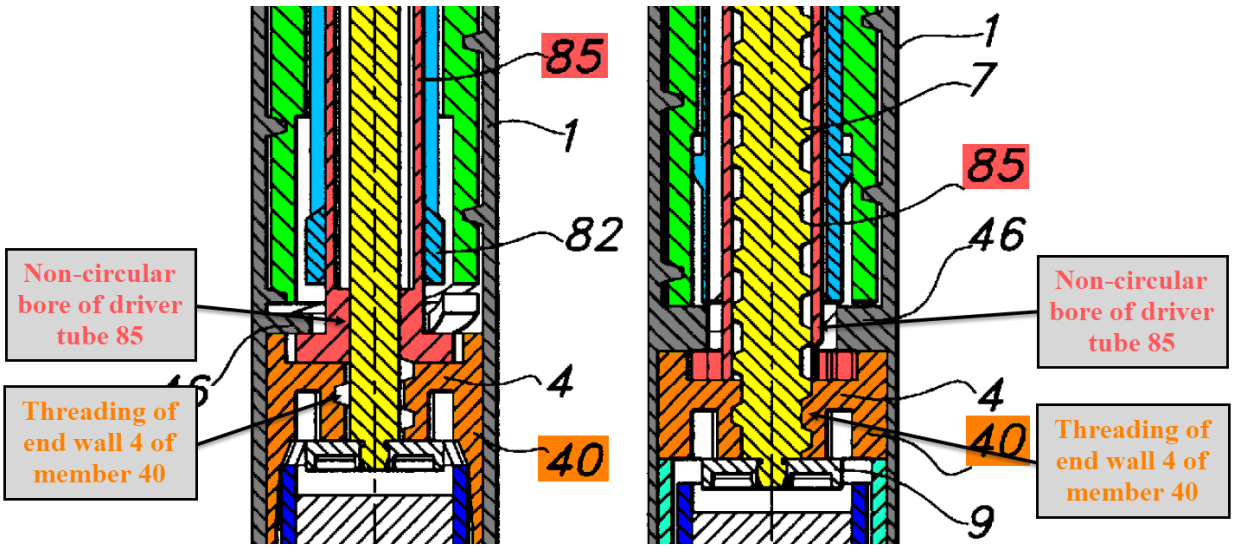

Ex. 1014, Figs. 15 and 16 (cropped and annotated).

Also significant this Response is the method for dose administration in Steenfeld-Jensen's fifth embodiment. When a dose is administered, the user applies a force to the injection button, which must be sufficient to overcome a one-way ratchet between the driver tube 85 and member 40. *See* animation at Exhibit 2147. Ex. 2107, ¶ 145. Drive tube 85 rotates and screws piston rod 6 through the threaded opening in member 40 such that piston rod 6 moves the ampoule (or cartridge) piston axially and in the distal direction to eject medicament. Ex. 2147 (animation depicting dose dialing and injection); Ex. 2107, ¶ 137.

Due to Newton's third law, the cartridge piston applies an equal-and-opposite force to the piston rod. The reactive force is transferred through the piston rod to the internal threads of member 40, then to housing 1, and back to the

user's hand. Ex. 2107, ¶¶ 35, 233. The movement of internal mechanisms, as further described below, causes additional friction-induced resistive forces that are ultimately transferred to the user's grip. These forces, if large enough, can result in the pen injector slipping out of the of the user's hand during injection. *Id*.

C. Møller

Møller is a U.S. patent application publication dated May 2, 2002. Møller describes an injection pen where a rack and gear wheel provides a mechanical advantage (*i.e.*, "gearing") between an injection button and an ampoule piston. Ex. 1015, ¶¶ 0006, 0011, 0013; Ex. 2107, ¶ 148. As discussed below, Møller teaches away from Steenfeldt-Jensen.

VI. THE CHALLENGED CLAIMS ARE PATENTABLE

A. The Challenged Claims Are Patentable Over Ground 1

In Ground 1, Petitioner fails to show that Burroughs discloses or renders obvious claim 1. In particular, Burroughs does not disclose a "helical groove provided along an outer surface of said dose dial sleeve," and Petitioner fails to prove that such a helical groove would have been obvious. Additionally, Burroughs does not disclose or render obvious a "tubular clutch."

1. Burroughs Does Not Disclose Or Renders Obvious A "Helical Groove Provided Along An Outer Surface Of Said Dose Dial Sleeve"

a) Petitioner's Proposed Modification to Burroughs

Petitioner proposes to "provide a helical groove, formed by two, parallel threads 110, 112, on the outer surface of the dial mechanism 34 of Burroughs." Petition at 42. As explained by Petitioner's declarant, Mr. Leinsing, this involves "add[ing] another helical rib next to the existing one, such that threads 110, 112 form a 'helical groove' that engages a threading provided by the housing." Ex. 1011, ¶ 166; Ex. 2107, ¶ 171. In other words, Petitioner's proposal is to place an ***additional*** thread behind Burroughs' existing threads 110, 112, such that the space ***between*** the threads forms a helical groove. Ex. 2107, ¶ 171. This "groove" engages with the "walls" of helical groove 158, with each thread 110, 112 fitting into a consecutive turn of helical groove 158. Ex. 2107, ¶ 171. An approximate illustration of this modification is shown below, along with Mr. Leinsing's annotation of Burroughs' figures for the modification:

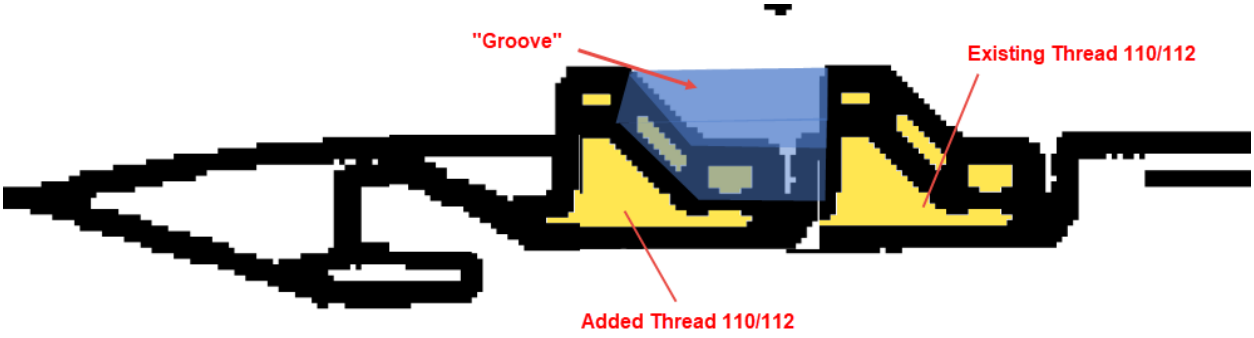

Ex. 1013, Fig. 7 (modified and annotated)

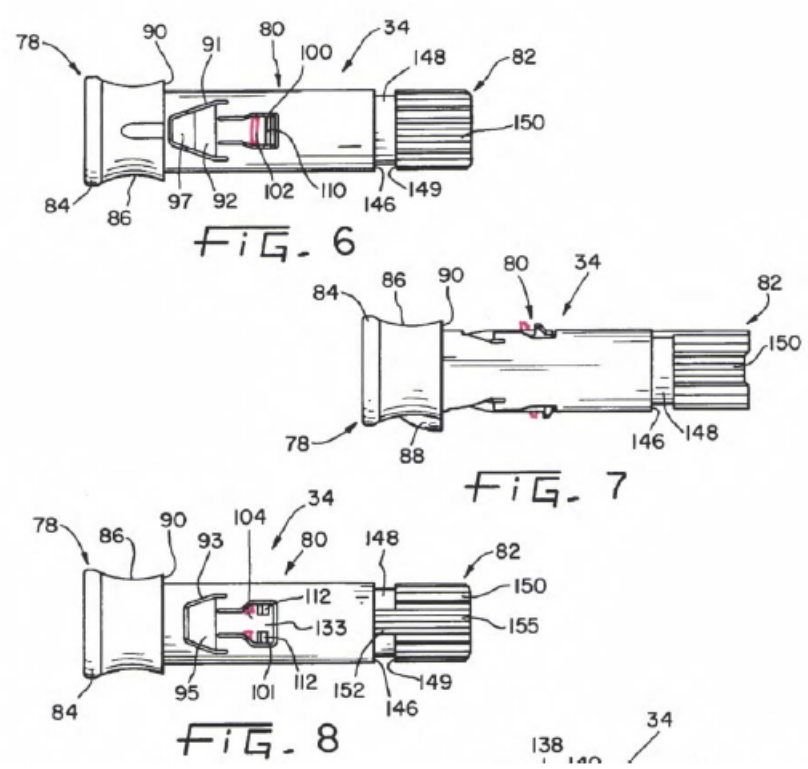

Ex. 1013, Figs. 6-8 (annotated by Mr. Leinsing and excerpted); Ex. 2103 (excerpted)

Although the Petition refers to this proposed modification as "revers[ing] the features" of Burroughs, it is plainly ***not*** a reversal. Ex. 2107, ¶ 172. Reversing the features would result in a spiral groove across the outer surface of dial mechanism 34 and two discrete, protruding threads 110, 112 at the inner surface of Burroughs' housing. *Id*. Petitioner's expert Mr. Leinsing confirmed at his deposition that "you're not swapping the threads around." Ex. 2163 at 194:15-20.

For the reasons discussed below, a POSA would not have been motivated to try Petitioner's proposed modification, which increases the likelihood that the

injection pen as modified would not properly function and subjects the internal components of the pen to undesirable increased stress during use.

b) Burroughs Does Not Disclose A "Helical Groove Provided Along An Outer Surface Of Said Dose Dial Sleeve"

Petitioner admits that Burroughs does not disclose a helical groove on the outer surface of the dose dial sleeve. Petition at 30. Thus, there is no dispute that Burroughs fails to disclose this limitation.

c) Petitioner Does Not Establish A Motivation To Modify Burroughs' Threads To Include A Groove

Petitioner fails to establish a reason for adding a second set of threads 110, 112. It is the Petitioner's burden to show "that a skilled artisan would have been motivated to combine the teachings of the prior art references to achieve the claimed invention, and that the skilled artisan would have had a reasonable expectation of success in doing so." *Kinetic Concepts, Inc. v. Smith & Nephew, Inc.*, 688 F.3d 1342, 1360 (Fed. Cir. 2012) (internal citation and quotations omitted).

Both the Petition and Mr. Leinsing's declaration state only that rib-to-groove threaded connections were known in the art, that the relative placement of the ribs and grooves was "largely interchangeable" and "routine variations," and that a POSA would have understood that positioning the threads 110, 112 as proposed by Petitioner to form two parallel ribs would have preserved the rotational operability

of the components in Burroughs' injector pen. Ex. 1011, ¶¶ 168-171; Petition at 40-42. But these assertions do no more than establish that a POSA *could have* performed the proposed modification, not that a POSA *would have* done so.

As the Federal Circuit cautioned, merely asserting that a particular placement of elements was a "design choice" does not make it obvious. *Polaris Indus., Inc. v. Arctic Cat, Inc.*, 882 F.3d 1056, 1069 n. 4 (Fed. Cir. 2018) (citing *Cutsforth, Inc. v. MotivePower, Inc.*, 636 F. App'x 575, 578 (Fed. Cir. 2016)). Rather, Petitioner must show "why a person of ordinary skill in the art would have selected these components for combination in the manner claimed." *Id*. (internal quotation marks omitted). It is insufficient to show that a POSA *could have* made the proposed combination. *Belden Inc. v. Berk-Tek LLC*, 805 F.3d 1064, 1073 (Fed. Cir. 2015). Rather, Petitioner must show "why a person of ordinary skill in the art *would have selected* these components for combination in the manner claimed." *Polaris Indus*., 882 F.3d at 1069 n. 4 (emphasis added; internal quotation marks omitted). Neither Petitioner nor Mr. Leinsing establishes that a POSA would have been motivated to make the proposed combination, and therefore Petitioner has failed to meet its burden of showing a rationale for the proposed modification.

Moreover, there are express reasons why a POSA would not have made the modification. Placing an additional thread in front of or behind Burroughs'

existing threads 110, 112 would have required detrimental changes to the legs 102, 104 on which the threads sit, which, as discussed in Section V.A, are what allow the threads 110, 112 to disengage from the helical groove 158 during dose injection. Ex. 2107, ¶ 181.

In Burroughs' existing design, the legs 102, 104 need only pivot inward enough for a single thread to disengage from a single turn of the helical groove 158. Ex. 2107, ¶ 184. In Petitioner's proposed modification, in which two threads are positioned on each leg, the legs must pivot inward enough for *two* threads to simultaneously disengage from two turns of the helical groove. *Id*. If the legs only pivoted enough for a single thread to disengage from the helical groove, the remaining thread would continue to prevent the dial mechanism from moving axially, which in turn prevent the pen from dispensing the dose. *Id*.

Alternatively, the force exerted against the injection button by the user may cause the remaining thread to "skip" out of the helical groove, resulting in a jerky and potentially dangerous movement of dial 34. *Id*. Even if a dose could be dispensed in this manner, the operation would be sub-par and undesirable. *Id*.

While Mr. Leinsing asserted in his deposition that his proposed modification did not require any changes aside from adding the additional threads, Professor Slocum explains that a POSA would have been deterred from adding another set of threads with no other changes. Ex. 2107, ¶ 185. Specifically, a POSA would have

understood that to allow legs 102, 104 to pivot enough for two threads to disengage from the helical groove, legs 102, 104 would have been subjected to 30 to 40 percent greater force and stress during injection. Ex. 2107, ¶¶ 186-187. This increased stress would cause the legs to wear out faster, decreasing the lifespan of the injector. *Id*., ¶ 188. A decrease in lifespan is especially undesirable for Burroughs' device, which is a multi-use device. *Id*.; Ex. 1013, Abstract.

While it would have been possible to reduce the stress on legs 102, 104 by changing their dimensions, a POSA likewise would have been deterred from changing their dimensions[3]. A POSA would have understood that making the necessary changes to the dimensions of legs 102, 104 would have also required increasing the internal diameter of the pen injector by at least 10 percent to accommodate the modified legs when they pivot inward during injection. Ex. 2107, ¶¶ 190-191. A POSA would have recognized this to be undesirable because a wider injector pen is more difficult to grasp and manipulate, especially for

[3] Note, neither Petitioner nor Mr. Leinsing have asserted such a change as part of their obviousness theory; indeed, as noted above, Mr. Leinsing testified that his proposed modification requires no changes other than adding the additional set of threads behind the existing threads 110, 112. Ex. 2163, 195:14-25. But out of completeness, Professor Slocum addresses the change.

diabetic patients who frequently suffer from hand and wrist conditions. *Id*. Increasing the internal diameter also increases cost, since the injector would require more material, and makes the device heavier and less portable.

Additionally, regardless of whether legs 102, 104 are changed, Mr. Leinsing's modification would have increased the injection force required for dispensing a dose. As Professor Slocum explains, because the legs must pivot further for the additional threads to clear the helical groove, a greater amount of the injection button's available travel must be allotted to engaging the ramped surfaces 96 to pivot the legs. Ex. 2107, ¶ 192. This leaves less travel available for dispensing the dose, which requires the user to exert greater force – on the order of 15% more – over the same distance (as compared to the unmodified Burroughs injector). *Id*. Because diabetic patients' ability to generate force is often diminished, a POSA would have recognized that Mr. Leinsing's modification impairs the usability of Burroughs' pen injector for patients with hand and wrist conditions, and therefore would not have been motivated to attempt the modification. *Id*.

Neither the Petition nor Mr. Leinsing's declaration identifies any benefit from this proposed modification that would have offset these detrimental changes. *Id.*, ¶ 193. Accordingly, a POSA would not have had a reason to modify Burroughs' injector pen as proposed.

2. Burroughs Does Not Disclose Or Render Obvious "A Tubular Clutch Located Adjacent A Distal End of Said Dose Dial Grip, Said Tubular Clutch Operatively Coupled to Said Dose Dial Grip"

Petitioner relies upon Burroughs' button 32 as purportedly disclosing this limitation. Petition at 36-39. But, Burroughs' button 32 does not "operate to reversibly lock two components in rotation" and Petitioner makes no argument that it would have been obvious to modify Burroughs to perform this function. Accordingly, Burroughs fails to disclose or render obvious a tubular clutch.

a) Burroughs' Button 32 Is Not "A Tubular Component That Can Operate To Reversibly Lock Two Components In Rotation."

As set forth above, the proper construction for the term "tubular clutch" is "a tubular component that can operate to reversibly lock two components in rotation." Petitioner has failed to show that Burroughs discloses or renders obvious a "tubular clutch," properly construed.

As an initial matter, Petitioner proposed "operates to reversibly lock two components in rotation" as the alternative function for its means-plus-function construction. Petition at 16-17. Petitioner also advocated a similar construction in the Litigation. Yet, in its analysis of "tubular clutch" in the Petition, Petitioner failed to address this construction. Petition at 36-39. Accordingly, Petitioner has not met its burden of proving invalidity under the proper construction of "tubular clutch." In view of the construction advocated by the Petitioner in the Petition and

at the District Court, the Petitioner should not be given a "do-over" in its forthcoming reply.

While Petitioner asserts that Burroughs' button 32 is a "tubular clutch" because it allegedly "rotationally decouples" the dial mechanism 34 from nut 36 and from the housing 22, the proper construction of "tubular clutch" requires the capability to "reversibly lock two components in rotation," not merely "rotationally decouple" them. Indeed, the District of New Jersey expressly rejected as inconsistent with the plain and ordinary meaning, claim construction proposals that would have required a structure that "couples and decouples" two components. Ex. 2165 at 10-11.

The record in this proceeding demonstrates that Burroughs' button 32 does not reversibly lock two components in rotation. Petitioner sets forth two theories for disclosing a tubular clutch: (1) engagement of dial mechanism 34 with housing 22, and (2) engagement of dial mechanism 34 with nut 36. Both theories fail.

Regarding Petitioner's first theory, Petitioner discusses that button 32, when pressed for injection, causes dial 34 to disengage from helical groove 158. Petition at 38-39. This, however, does not demonstrate that the button 32 "reversibly locks" the dial 34 and housing 22 "in rotation." In particular, even when dial 34 is engaged with housing 22, the two components are not "reversibly locked ***in rotation***." Ex. 2107, ¶ 207. Dial 34 is coupled to the housing by threads 110, 112,

which engage with the housing's helical groove 158. As Burroughs explains, "[u]pon rotation of dial 34, threads 110, 112 ***move*** within housing groove 158 in the proximal direction as dial mechanism 34 retracts from housing 22…." Ex. 1013, 10:34-37. As Professor Slocum explains, this means that dial mechanism 34 rotates relative to housing 22, and therefore dial mechanism 34 and housing 22 are not "reversibly locked in rotation." Ex. 2107, ¶ 207. Thus, Petitioner's first theory does not invalidate the claims.

Regarding Petitioner's second theory, Petitioner argues that button 32, when pressed for injection, causes splines 144 of dial 34 to disengage from nut 36's splines 192 to allow dial 34 to rotate relative to nut 36 – *i.e.*, Petitioner asserts that the button unlocks the dial from the nut by disengaging their respective splines. Petition at 39. According to Burroughs, however, button 32 ***never locks*** the dial to the nut. Ex. 2107, ¶ 208. Rather, splines 144 and 192 engage to couple the dial to the nut when the user retracts the dial mechanism from the zero-dose position during dose setting. *Id*.; Ex. 1013, 8:42-48, 10:15-26. Thus, Petitioner's second theory does not render the claims invalid because button 32 does not reversibly ***lock*** two components in rotation.

b) Burroughs Expressly Discloses A Clutch That Is Not Button 32, Is Not Tubular, And Is Not Located Adjacent To A Distal End Of A Dose Knob

Notably, Burroughs does discloses a "clutch", which consists of splines 144 and teeth 192:

> ***The clutching device*** comprises a series of splines on the inner cylindrical surface of the dial mechanism which axially engage corresponding splines on the outer surface of the nut. The splines are engaged with one another by retracting the dial mechanism with respect to the nut after the dial mechanism has been rotated to its zero-dose position.

Ex. 1013, 2:59-65; Ex. 2107, ¶ 209. Splines 144 and teeth 192 reversibly lock two components in rotation – dial mechanism 34 and nut 36. Petitioner, however, cannot point to this clutch as the claimed "tubular clutch" because splines 144 and teeth 192 are not tubular and they are not located adjacent to a distal end of the proximal portion 78 of the dial mechanism 34 – both of which are required by the claim. Thus, splines 144 and teeth 192 are not "a tubular clutch located adjacent a distal end of said dose knob." Ex. 2107, ¶ 209.

* * *

Because Petitioner relies solely on button 32 for the "tubular clutch located adjacent a distal end of said dose dial grip" limitation, and because button 32 does

not operate to reversibly lock two components in rotation, Burroughs does not disclose or render obvious a "tubular clutch located adjacent a distal end of said dose knob".

B. The Challenged Claims Are Patentable Over Ground 2

1. There Is No Disclosure or Suggestion in Steenfeldt-Jensen of an Internally Threaded Driver Tube

Claim 1 requires "a drive sleeve extending along a portion of said piston rod, ***said drive sleeve comprising an internal threading*** near a distal portion of said drive sleeve, ***said internal threading adapted to engage an external thread of said piston rod***." Ex. 1001, claim 1 (emphasis added). Petitioner concedes that Steenfeldt-Jensen's "driver tube 85 rotationally engages with the rod through the non-circular bore, rather than 'an internal threading near a distal portion.'" Petition at 55. Petitioner argues, however, that a POSA would have known to modify Steenfeldt-Jensen to have this feature because the reference "expressly contemplates a modification in which the driver tube contains an internal threading that engages the piston rod's external threading." *Id*. at 60. None of the four passages in Steenfeldt-Jensen that Petitioner relies on discloses an internally threaded driver tube. Instead, these passages disclose an internally threaded "nut member" or "nut element", which is rotated by a driver tube – the driver tube itself is not threaded.

The first passage is at 2:46-53. Petition at 61. No portion of this passage identifies a driver tube, much less an internally threaded driver tube. Ex. 2107, ¶¶ 215-216. Instead, this passage identifies (i) an axially moveable, but non-rotatable "piston rod guide", and (ii) a rotatable "nut member" having an internal thread. Ex. 1014, 2:40-53. Petitioner does not explain how this passage, which does not mention a driver tube, suggests a threaded driver tube.

The next two passages are from 3:15-20 and 3:44-47. Petition at 60, 61. Petitioner argues that these passages teach a threaded driver tube because the passages disclose alternative ways to drive a piston rod; namely, (1) rotation of the scale drum can rotate the piston rod relative to the nut member; or (2) rotation of the scale drum can rotate the nut member relative to the piston rod. Petition at 60-61 (citing Ex. 1014 at 3:15-20, 3:44-47). But these passages only recognize that for a piston rod to move axially through a nut member, there must be relative rotation between the piston rod and the nut member (*i.e.*, the well-known mechanical engineering principle that either the nut rotates, or the piston rod rotates). Ex. 2107, ¶¶ 216-217. These disclosures do not disclose or suggest modifying a ***driver tube*** to have threads. Ex. 2107, ¶¶ 215-217.

The final passage, at 7:44-47, describes a driver tube rotating a threaded "nut member." Petition at 60. Again, there is no disclosure of a threaded driver tube. Ex. 1014, 7:44-47 ("Embodiments may be imagined wherein the piston rod guide

is provided in the wall 4 and a ***nut element is rotated by the driver tube*** and such embodiment will not be beyond the scope of the invention.") (emphasis added); Ex. 2017, ¶¶ 218-220.

Thus, none of the four passages relied on by the Petitioner teaches or suggests the driver tube having internal threads. At best, the passages teach an internally threaded nut member and a piston rod with relative movement between the two components. But the nut member is not the driver tube, and Steenfeldt-Jensen makes clear throughout its disclosure that the nut member and the driver tube are different components. Ex. 1014, 3:41-47, 7:41-47; FIG. 13, 10:2-10 (identifying a "nut member 48," also referred to as a "nut element" and a discrete "driver tube 45"). Accordingly, the passages relied on by Petitioner ***do not*** support the modification suggested by the Petitioner, and Petitioner cannot show obviousness as a matter of law. *Eurand, Inc. v. Mylan Pharms., Inc. (In re Cyclobenzaprine Hydrochloride Extended-Release Capsule Patent Litig.)*, 676 F.3d 1063, 1069 (Fed. Cir. 2012) (citing *Procter & Gamble Co. v. Teva Pharms. USA, Inc.*, 566 F.3d 989, 994 (Fed. Cir. 2009)).

a) Steenfeldt-Jensen's Disclosure at Column 7, Lines 44-47 is for the First Embodiment, not the Fifth Embodiment

Petitioner argues that a POSA would have known to modify Steenfeldt-Jensen's fifth embodiment (shown in Figures 15-17 and described at 11:6-12:16)

based on a passage from Steenfeldt-Jensen's first embodiment (shown in Figures 1-5 and described at 5:33-7:47):

> In the ***shown embodiment*** [embodiment 1] the end wall 4 with its threaded bore forms a nut member relative to which the piston rod is rotated by the piston rod guide 14 and the driver tube 26. Embodiments may be imagined wherein the piston rod guide is provided in the wall 4 and a nut element is rotated by the driver tube and such embodiment will not be beyond the scope of the invention.

Ex. 1014, 7:41-47 (emphasis added). This argument fails because a POSA would have understood that this passage is not applicable to the fifth embodiment. 2107, ¶¶ 223-226.

First, the "shown embodiment" refers to the first embodiment described with respect to Figures 1-5. Ex. 1014, 5:33-7:47 (the portion of the specification describing first embodiment). The discussion of the fifth embodiment in Steenfeldt-Jensen does not include a similar passage. *Id.*, 11:6-12:16 (the portion describing Steenfeldt-Jensen's fifth embodiment). Indeed, the language from 7:41-47 originates from Steenfeldt-Jensen's provisional application, which included the first embodiment, but did not include the fifth embodiment. Ex. 2127, 11:2-5; *see generally id*. (lacking any description of the fifth embodiment). When the fifth embodiment was added to the specification, similar language was not included to

cover the fifth embodiment, further indicating that the passage is not applicable to the fifth embodiment.

Second, a POSA would have understood that the passage is not a general teaching applicable to all of Steenfeldt-Jensen's embodiments. For example, modifying Steenfeldt-Jensen's second embodiment results in a non-functioning pen injector. Ex. 2107, ¶ 226. As Professor Slocum explains, placing the non-circular opening in the ampoule holder 2 (turquoise) of the second embodiment and putting a threaded opening in the pawl 13 (red) would allow the user to dial the dose, but not inject the dose. If the user attempts to inject a dose, the injection button seizes. *Id.*. Accordingly, a POSA would have understood that the passage that Petitioner relies on for their alleged modification is made specifically, and only, for the first embodiment. *Id*.

Finally, even assuming that (1) the passage was in the context of the fifth embodiment, or (2) the passage generally applied outside the first embodiment, Petitioner's argument still fails because the passage does not teach the modification that Petitioner proposes. Petitioner, as discussed in more detail in the next section, proposes the following modification to the fifth embodiment:

> **Steenfeld-Jensen Actual Fifth Embodiment:** member 40 has threads that engage with the threads on the piston rod, and the driver tube has a non-circular bore that the piston rod slots into.

> **Petitioner's Modified Fifth Embodiment:** member 40 has a non-circular slot that the piston rod slots into, and the driver tube has threads that engage with threads on the piston rod.

Petition at 60-62; Ex. 2107, ¶ 227; Ex. 2164 at 219:18-220:11. The passage at 7:44-47 does not suggest this modification. Instead, it teaches putting a piston rod guide in end wall 4 of ampoule holder 2 (of the first embodiment), and having driver tube 26 (of the first embodiment) rotate a nut element. Ex. 2107, ¶ 215.

b) Petitioner's Modification to Switch the Non-Circular Opening and Threaded Opening in the Fifth Embodiment Results in an Inferior Pen Injector

Further, Petitioner's proposed modification to the fifth embodiment of Steenfeldt-Jensen is antithetical to pen injector design during the relevant time period and results in an inferior pen injector. Specifically, moving the threads to the driver tube, and moving the non-circular slot to member 40, ***introduces*** a major new source of friction to Steenfeldt-Jensen's fifth embodiment. In Petitioner's modified embodiment, the outward flange (which includes flexible arms) of the threaded driver tube is forced up against an inner flange of the housing during dose injection, thus creating a disk brake. Ex. 2107, ¶¶ 232-238. This new friction source results in an inferior device with higher injection force, which is a critical design consideration for a pen injector. Accordingly, a POSA would not have been motivated to make this modification.

Friction causes efficiency losses because some of the force going into the pen during dose injection is used overcome friction. These losses are highly undesirable as they require the user to expend greater energy to inject medicament. Ex. 1015, ¶¶ 0004-0006; Ex. 2107, ¶¶ 37-39, 44-45, 54, 56-57, Section II, *supra*. Injection force is regularly assessed as a benchmark for these products. Ex. 2107, ¶¶ 56-57, Ex. 2163 at 80:17-81:5. A significant reason for the success of Patent Owner's injection pen is its ease-of-use, and the 069 Patent (which is embodied in Patent Owner's pen) specifically recites that a primary purpose of its invention is to "help[] reduce the overall force required for a user to cause medicinal product to be dispensed." Ex. 1004, 3:44-47.

Prof. Slocum created an analytical model presented in a spreadsheet that demonstrates how friction between the pen injector elements leads to efficiency losses. Specifically, Prof. Slocum calculated the injection force of Steenfeldt-Jensen's fifth embodiment and then, controlling for all variables, calculated it again for Petitioner's proposed modification.

Furthermore, a physical model also conveys the fundamental flaws in Petitioner's proposed modification. Ex. 2107, ¶¶ 242-255. The model (the "Collar Friction Model") conveys the basic principle for why Petitioner's proposed modification would not work—*i.e.*, the introduction of "collar friction" when the driver tube is adapted to have threads. *Id.* Prof. Slocum explains that this Collar

Friction Model directly compares Steenfeldt-Jensen's fifth embodiment with Petitioner's proposed modification to the fifth embodiment. *Id*. Videos and animations demonstrating the Collar Friction Model have been provided to the Board as Exhibit Nos. 2211, 2215-2217.

(1) Analytical Model

To quantitatively compare the impact of Petitioner's proposed modification to Steenfeldt-Jensen's fifth embodiment, Prof. Slocum used an analytical model that determines the efficiency of a pen injector for a given set of parameters. Ex. 2107, Appx. A, ¶¶ 242-244. A more efficient pen injector requires less force by the user to move the ampoule piston to inject medication. Ex. 2107, Appx. A, ¶ 243. Friction plays a large role in efficiency because the user must exert sufficient force to overcome the internal friction of the pen injector (*i.e.*, increased friction reduces the efficiency of the force applied by the user). The model calculates this force for both Steenfeldt-Jensen's fifth embodiment and Petitioner's proposed modification to the fifth embodiment. For the model shown in Appendix A to Prof. Slocum's declaration, Prof. Slocum used physical parameters of the FlexPen, which is the commercial embodiment of Steenfeldt-Jensen's fifth embodiment. The difference in force delivered to the ampoule piston is 4.5N, which means that mathematically, and by holding all variables other than Petitioner's proposed

modification constant, Petitioner's proposed modification increases the amount of force required from the user to inject a dose by 51%.

(2) Collar Friction Model

The Collar Friction Model physically demonstrates the principle underlying why Petitioner's proposed modification significantly degrades performance. Ex. 2017, ¶¶ 245-255. Videos demonstrating the Collar Friction Model have been submitted as Exhibit 2215-2217. The model includes the following components that can be arranged to demonstrate both Steenfeldt-Jensen's fifth embodiment (i.e., a piston rod threadedly engaged with member 40 and slotted to the driver tube) and Petitioner's proposed modified embodiment (i.e., a piston rod slotted to a member 40 and threadedly engaged with the driver tube):

> **Housing:** This component represents housing 1 of Steenfeld-Jensen's fifth embodiment.
>
> **Collar plus Guide or Thread Insert:** This rotating component in combination with the slotted red piece ("Guide") represents the unthreaded driver tube 85 of Steenfeldt-Jensen's fifth embodiment. The Collar in combination with the threaded blue piece ("Thread Insert") represents a threaded driver tube according to Petitioner's proposed modification.
>
> **Frame plus Guide or Thread Insert:** This rotationally-fixed component in combination with the Thread Insert represents threaded member 40 in Steenfeldt-Jensen's fifth embodiment. The Frame in

combination with the Guide represents the slotted member in Petitioner's proposed modification.

Piston Rod: This component represents the piston rod 6 in Steenfeldt-Jensen's fifth embodiment.

Bearing: This component carries a 2 kg weight that is used to represent the resistive force experienced by Steenfeldt-Jensen's piston rod 6 when it presses the ampoule piston during dose injection.

Ex. 2107, ¶ 247. These components of the Collar Friction Model are shown in the two cross-section illustrations below.[4]

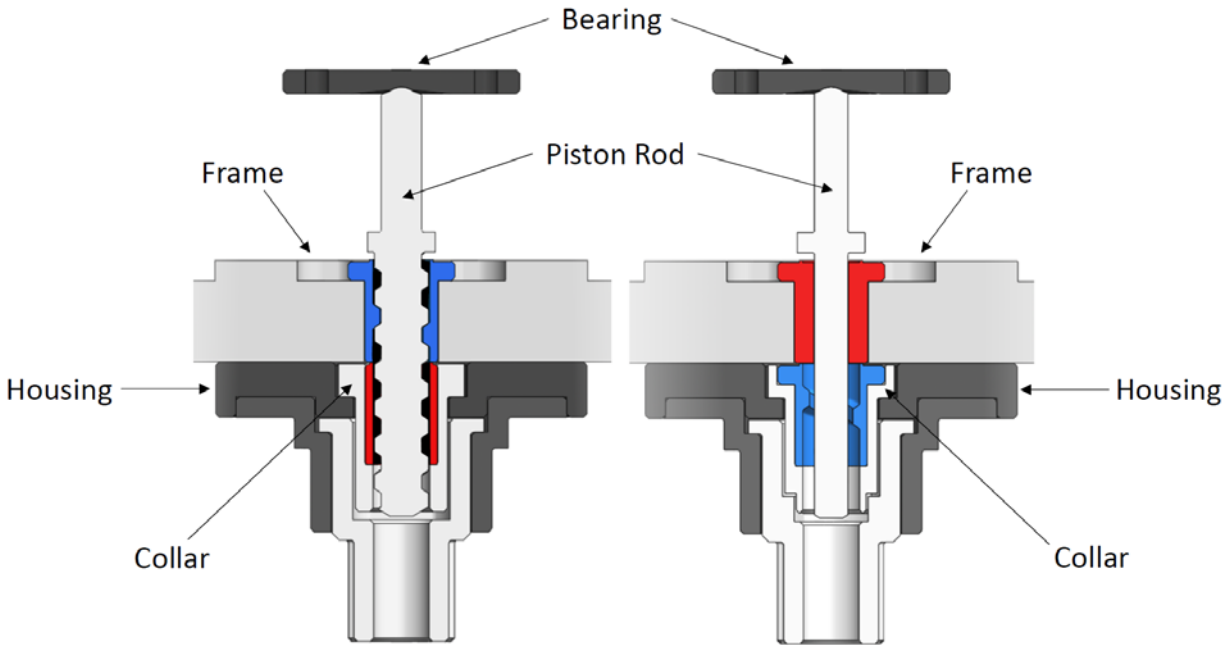

[4] In the arrangement on the right below, the perspective of the Guide and the Piston Rod are offset by 90° to provide additional visual details.

On the left, the model is arranged to demonstrate Steenfeldt-Jensen's fifth embodiment, and therefore, the Thread Insert (blue) is fitted to the Frame and the Guide (red) is fitted to the Collar. On the right, the model is arranged to demonstrate Petitioner's proposed modification, and therefore, the Guide (red) is fitted to the Frame, and the Thread Insert (blue) is fitted to the Collar. Figure 16 of Steenfeldt-Jensen is also reproduced below with annotations to show the orientation of the Collar Friction Model:

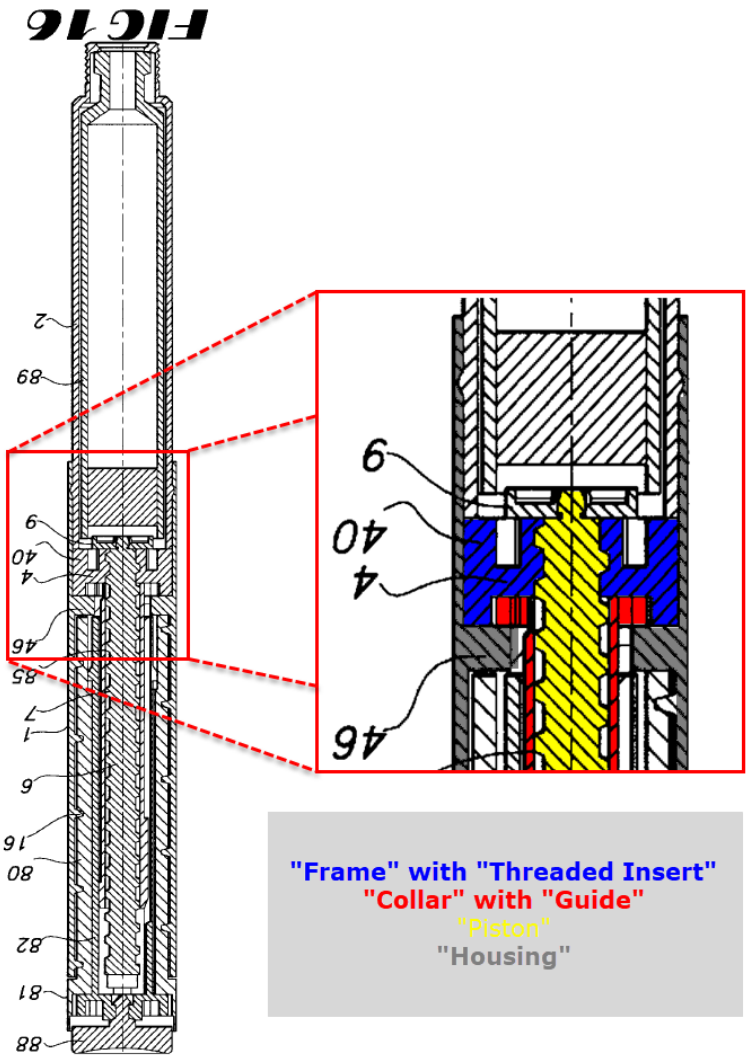

As seen in the videos submitted as Exhibit 2215-2217, simply swapping the location of the threaded opening and the slotted opening creates a significant difference. Ex. 2107, ¶¶ 249-254, Ex. 2215, Ex. 2216, Ex. 2217. That is, rotating the Collar with the Threaded Insert (Petitioner's proposed modification) is more difficult than rotating the Collar with the Guide (Steenfeldt-Jensen's fifth embodiment). Specifically, manually rotating the Collar with the Threaded Insert requires 50% more force on average to advance the piston rod than rotating the Collar with Guide. Ex. 2107, ¶¶ 252-254.

The additional friction is also apparent from what happens after the piston rod is rotated upward and then released. In the configuration representing Steenfeldt-Jensen's fifth embodiment (i.e., Collar fitted with the Guide), if the piston rod is rotated upward and released, it rotates back down to its original position because of the 2kg weight on the bearing. In contrast, in the configuration representing Petitioner's proposed modification (i.e., Collar fitted with the Thread Insert), if the piston rod is rotated upward and then released, it remains stuck in place because the 2kg weight is insufficient to overcome the additional friction (i.e., the collar friction). Ex. 2107, ¶¶ 249-251.

(3) Explanation for Why Petitioner's Modification Results in Higher Friction

Steenfeldt-Jensen's unmodified fifth embodiment is reproduced in the figure below, left. During dose injection, an axial force is delivered from the piston rod 6

(yellow) to the ampoule piston (dark green). For every action, there is an equal and opposite reaction. Ex. 2107, ¶ 233. Accordingly, this axial force from the piston rod 6 (yellow) causes a reaction force (pink arrows) exerted by ampoule piston (dark green) against the piston rod 6 (yellow) that translates to the internal threads of non-rotatable member 40 (orange) as an upward force (also pink lines with arrows), which in turn flows to the housing of the injector held by the user's hand gripping the housing. Ex. 2107, ¶¶ 233-238. Thus, in the fifth embodiment, all of the axial reaction force from ejecting the fluid from the ampoule is borne by member 40, which is axially and ***rotationally fixed*** within housing 1 (denoted in grey). Ex. 2107, ¶ 233.

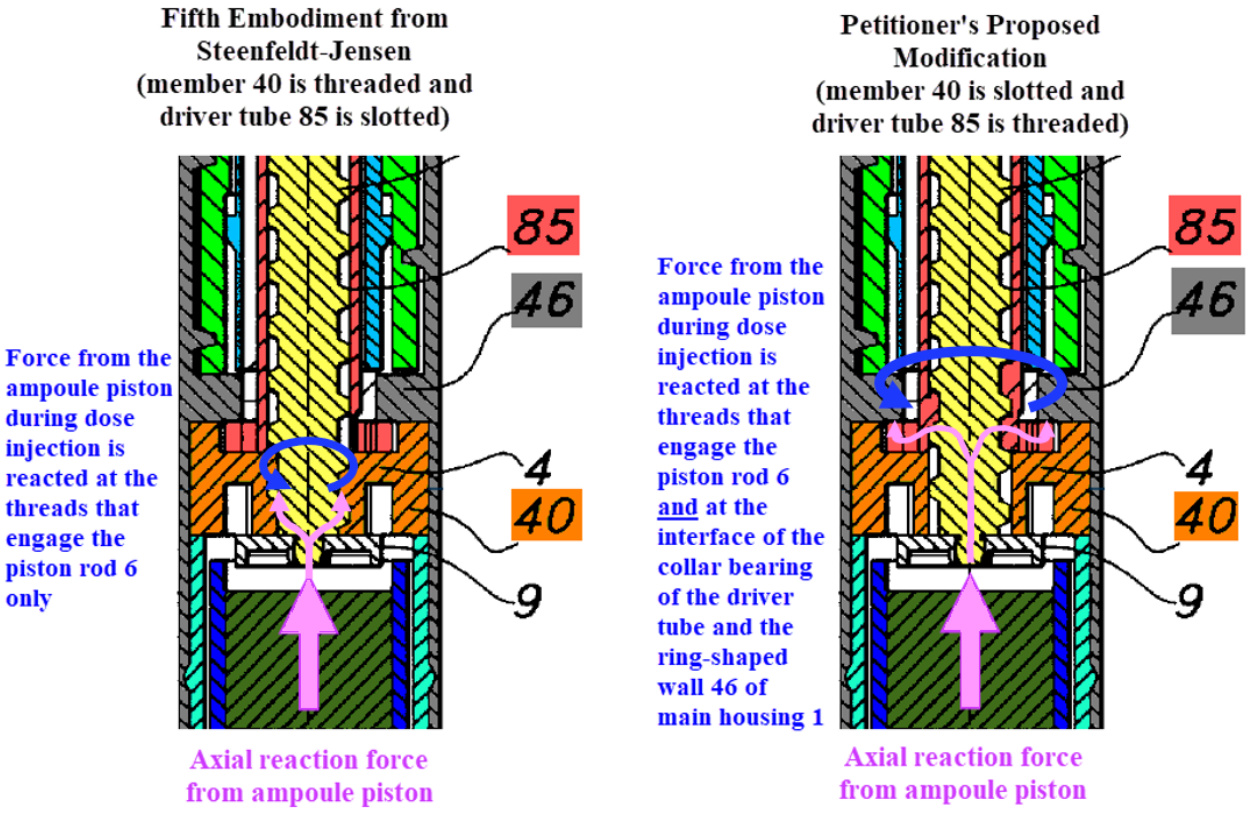

Ex. 1014, Fig. 16 (left) (cropped and annotated).

Importantly, in the unmodified fifth embodiment, the force at member 40 acts at a small radius and thus introduces only minor frictional torque ($\tau = r \times F$) (blue arrow) at the threaded interface between the piston rod 6 and member 40. Ex. 2017, ¶ 234; Ex. 2152.

In contrast, in the Petitioner's modified device (rightmost figure, above), essentially all of the reaction force is borne by now-threaded driver tube 85 (red), instead of by member 40. Ex. 2107, ¶¶ 235-236. But, unlike member 40, driver tube 85 ***is not rotationally fixed*** with respect to housing 1 (and the housing's ring-shaped wall 46) because the driver tube 85 ***must also rotate*** as the piston rod 6 is driven axially during dose injection. Ex. 1014, 12:10-13, Ex. 2107, ¶¶ 237-238. Accordingly, driver tube 85 in the modified device must resist the reaction thrust force ***at the same time that it is rotating***, and this force is increased by rotating contact between the flange on the driver tube that extends radially outward to contact a surface on the housing 1. Ex. 2107, ¶¶ 237-238; Ex. 2152.

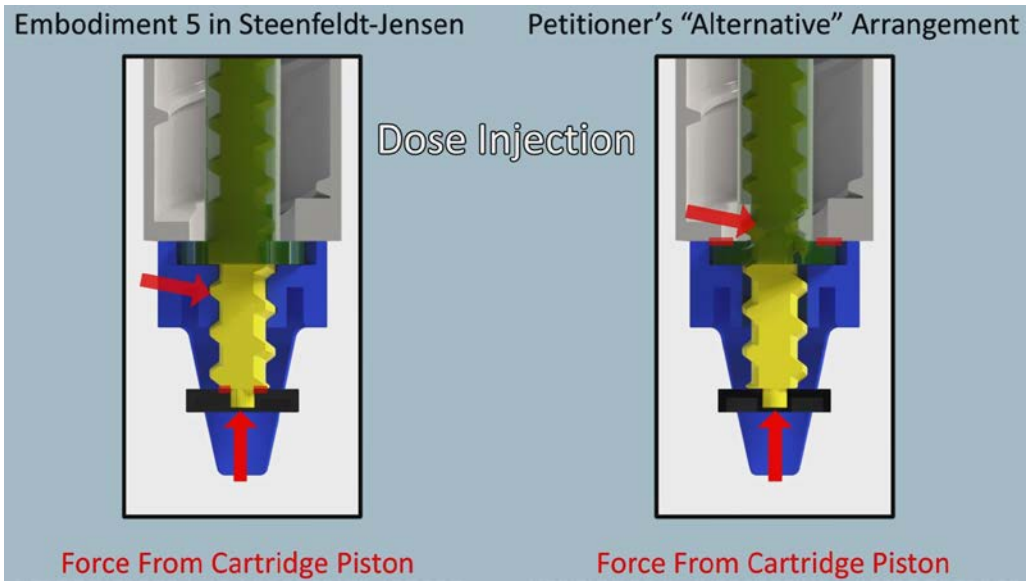

Ex. 2152 (screenshot from animation)

Thus, a significant source of friction is introduced during dose injection at the flange on the driver tube 85 as it is being driven upward as it rotates by thread reaction forces into the ring-shaped wall 46 of housing 1 (grey). Ex. 2107, ¶¶ 237-238. This driver tube flange acts as a disk brake and is what Prof. Slocum refers to as the drag torque or collar friction. Ex. 2107, ¶ 238. Because this new friction interface is at a greater radius, the resulting frictional torque (blue arrows) is much greater ($\tau = r \times F$), ***approximately 50% greater.*** Ex. 2107, ¶¶ 242-244.

As a result, Petitioner's modified device needs considerably more injection force, which is contrary to the critical design objectives in this art. Ex. 1004, 1:36-40, Ex. 1015, ¶¶ 0004-0006; Ex. 2107, ¶¶ 54-57, Section II, *supra*. Modifying the fifth embodiment as Petitioner proposes ***increases friction*** and impairs the device. Ex. 2107, ¶¶ 229-231.

(4) Additional Problems Caused by Petitioner's Proposed Modification

Prof. Slocum further explains that this increase in friction is only one of the problems with Petitioner's proposed modification. There are three other potential device failures associated with Petitioner's modification that would dissuade a POSA from making the proposed combination. Ex. 2107, ¶¶ 239-241.

First, because the outer flange on the driver tube 85 is comprised of flexible arms that act as a ratchet with member 40, the flexible arms can break, rendering the device inoperable, when subjected to the frictional stresses from being pressed up against ring-shaped wall 46 of housing 1. Indeed, this happened when Prof. Slocum attempted to build and test Petitioner's modification. Ex. 2107, ¶ 240.

Second, the flexible arms, which serve as ratchet arms to prevent rotation in one direction (*see, e.g.*, Ex. 1014, 11:55-62), may get stuck and prevent the rotation necessary for injection. Ex. 2107, ¶ 239.

Third, because there is an opening in the ring-shaped wall (identified below with a blue box), the arms could be pressed into the opening, thereby jamming the driver tube 85 or causing the flexible arms to pass above the ring-shaped wall such that the driver tube 85 moved proximally into the housing. Ex. 2107, ¶ 239.

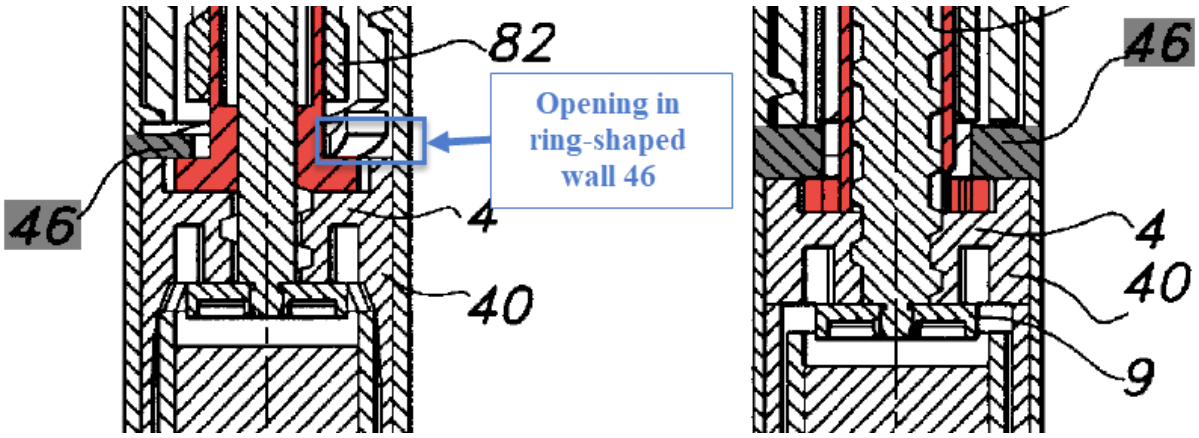

Ex. 1014, Figs. 15 and 16 (cropped and annotated).

***

In sum, a POSA would not have been motivated to modify the fifth embodiment because it would have made the device significantly increased the injection force, potentially resulted in several types of failures, and there is no evidence of any benefit resulting from the modification. *Plas-Pak Indus. v. Sulzer Mixpac AG*, 600 F. App'x 755, 758-60 (Fed. Cir. 2015); *In re Gordon*, 733 F.2d 900, 902 (Fed. Cir. 1984).

C. The Challenged Claims Are Patentable Over Ground 3

1. Møller With Steenfeldt-Jensen Does Not Teach or Render Obvious "a drive sleeve extending along a portion of said piston rod"

Petitioner argues that Møller's connection bars 12 having a nut 13 teach the claimed "drive sleeve." Petition at 74-77. In the Litigation, Petitioner, Patent Owner, and the Court all agree that a drive ***sleeve*** is at least "an essentially tubular component." Ex. 2016 at .002, Ex. 2165 at 17-18. As shown with red shading in

both the side and top-down cross-sectional views below, the connection bars 12 and the nut 13 do not form a sleeve, or an essentially tubular component:

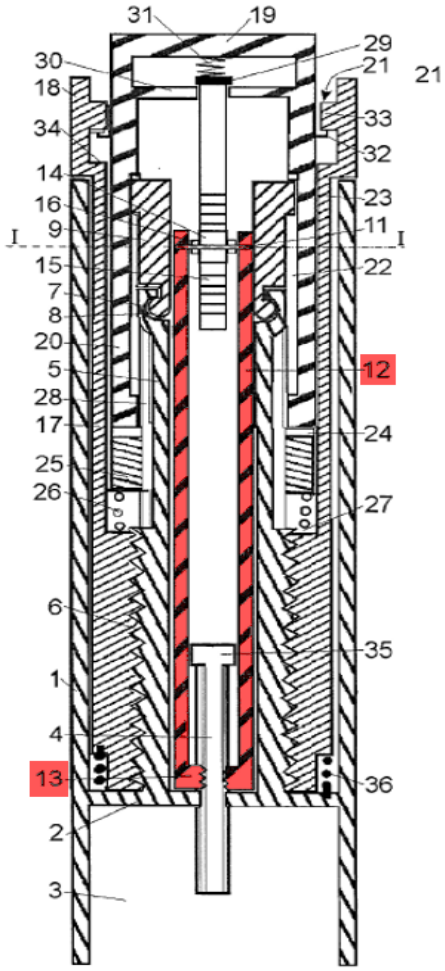

Fig. 1

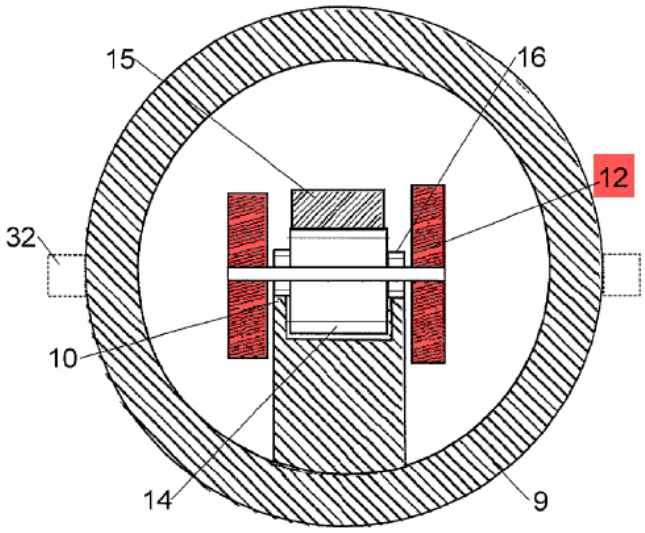

Fig. 2

Ex. 1015, Figs. 1 and 2 (red shading added).

Rather, the connection bars constitute two parallel bars. Ex. 2107, ¶¶ 273-274.

To overcome this deficiency, Petitioner points to tubular connection element 112 and nut 113 in Møller's ***second embodiment***. Petition at 77. The Petition lacks any argument, however, that a POSA would have been motivated to modify the connection bars 12 to form a sleeve according to Møller's second embodiment,

or that a POSA would have been motivated to combine connection element 112 into Møller's first embodiment. M.P.E.P. 2143 (listing exemplary rationales supporting a motivation to combine, none of which is addressed in the Petition).

Instead, Petitioner merely contends that "a POSA would have understood [connection bars 12 and nut 13 in the first embodiment and connection element 112 and nut 113 in the second embodiment] to be structurally and functionally equivalent." Petition at 77. Based on this "structural and functional equivalency", Petitioner concludes that a POSA "would have expected connection bars 12 with nut 13 could readily be formed as a tubular structure that encompasses piston rod 4, without affecting the device's operation." *Id.* Importantly, the Petition does not allege ***why*** a POSA would have been motivated to form connection bars 12 and nut 13 as a tubular structure, and indeed there does not appear to be any reason to do so. *Personal Web Techs., LLC v. Apple, Inc.*, 848 F.3d 987, 993-94 (Fed. Cir. 2017).

Nonetheless, it is not correct that the connection bars 12 and nut 13 in Møller's first embodiment are structurally and functionally equivalent to connection element 112 and nut 113 in the second embodiment. Nor is it correct that a POSA would have expected that the connection bars 12 and nut 13 in Møller's first embodiment could be formed as a tubular structure without affecting the device's operation. Ex. 2107, ¶ 276.

a) A POSA Would Not Have Considered Connection Bars 12 and Nut 13 Equivalent to Connection Element 112 and Nut 113

The figure below demonstrates that connection bars 12 in the first embodiment are not structurally equivalent to the connection element 112 in the second embodiment:

Møller's First Embodiment

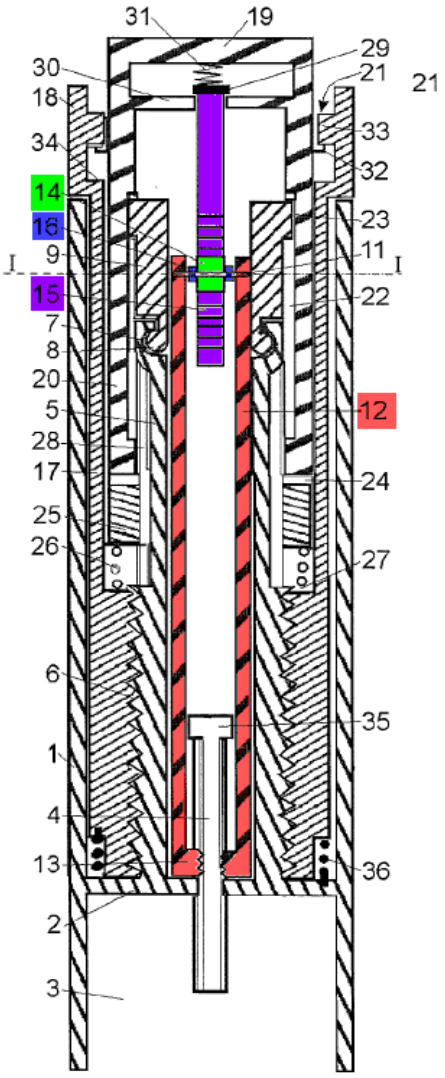

Fig. 1

Møller's Second Embodiment

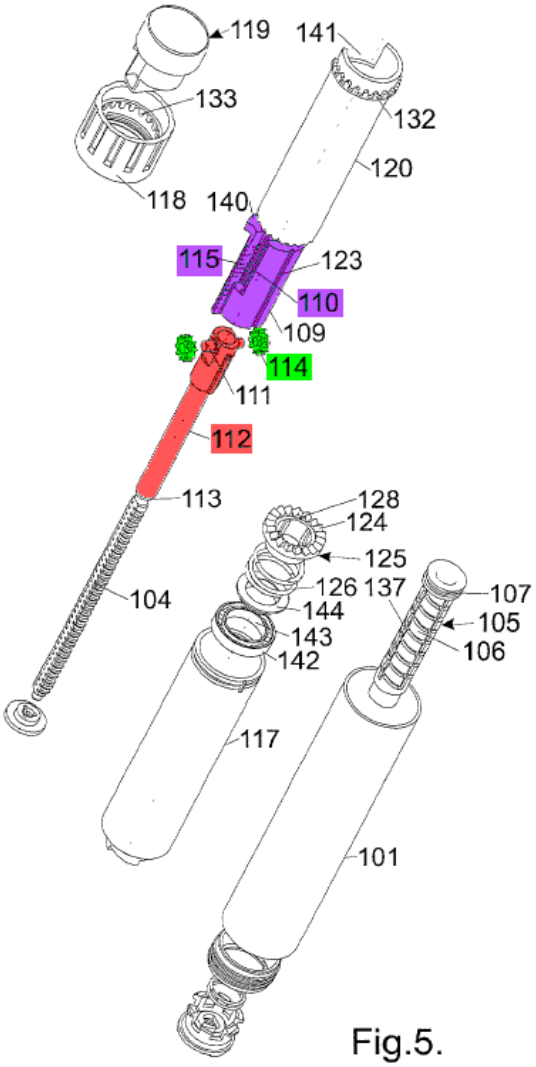

Fig.5.

Ex. 1015, Figs. 1 and 5 (annotated).

The connection bars 12 and connection element 112 are differently shaped, engage with components differently, and operate differently. Ex. 2027 (Møller's first embodiment), Ex. 2028 (Møller's second embodiment), Ex. 2107, ¶ 279. As shown below, in Møller's first embodiment, connection bars 12 have an open shape that ***internally*** accommodates both gear wheel 14 (green), gear wheel 16 (blue), and rack 15 (purple); and more importantly, allow gear wheel 16 (blue) to engage rack 10 (yellow), which is connected to the gearbox 9 as shown below. Ex.1015, [0024]; Ex. 2107, ¶ 279.

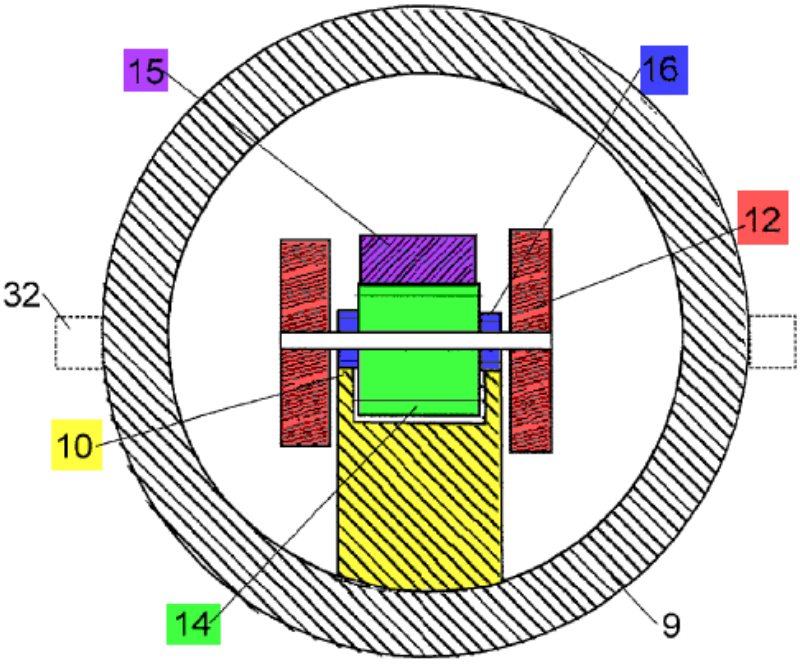

Fig. 2

Ex. 1015, Fig. 2 (annotated).

In contrast, in Møller's second embodiment, connection element 112 (see Fig. 5, above) has a closed tubular shape with gear wheel 114 (green) ***mounted on its exterior*** and is engaged with racks 110 and 115 (both purple), which are also ***exterior*** to connection element 112. Ex.1015, [0039]-[0040], Ex. 2107, ¶ 280. Thus, the tubular structure of connection element 112 is not configured for internal gears and racks, or to have internal gears (*e.g.*, gear wheels 16 in blue) which mate with an external rack (*e.g.*, rack 10 in yellow).

In sum, a POSA would not have considered the connection bars 12 and nut 13 in Møller's first embodiment functionally and structurally equivalent to connection element 112 and nut 113 in Møller's second embodiment. Petitioner's contention otherwise is conclusory, without any meaningful analysis or comparison of the differences between the components. Ex. 2107, ¶ 281. Because Petitioner's obviousness argument is predicated on this purported equivalency, the argument fails. Accordingly, Møller does not teach or render obvious claim limitation [1.5], and thus does not render obvious claim 1.

b) A POSA Would Not Have Expected Connection Bars 12 with Nut 13 Could Be Formed as a Tubular Structure That Encompasses Piston Rod 4 Without Affecting the Device's Operation

Even if Petitioner were correct that the components are equivalent, neither Petitioner nor its expert explains how to implement the tubular shape of connection element 112 in the first embodiment without interfering with the internally

mounted gear wheels 14 and 16, and racks 10 and 15 and thus the device's operation. Petitioner simply concludes:

> Given Møller's teaching that the tubular connection element 112 with nut 113 corresponds to connection bars 12 with nut 13, a POSA would have understood the components to be structurally and functionally equivalent. EX1011, ¶¶370-71. A POSA thus would have expected connection bars 12 with nut 13 could readily be formed as a tubular structure that encompasses piston rod 4, without affecting the device's operation. *Id.* Møller thus taught the claimed "drive sleeve."

Petition at 77.

But as noted above, the non-tubular, open shape of connection bars 12 in the first embodiment provides sufficient space for the ***internal*** gear wheels and racks, and importantly permits gear wheels 16 (blue) to engage rack 10 (yellow). The first embodiment would require a significant redesign of elements to accommodate a tubular structure because a tubular structure would interfere with the engagement of rack 10 (yellow) and gear wheel 16 (blue), which is only possible due to the open shape of connection bars 12. Gear wheels (14 and 16) and racks (10 and 15) would need to be mounted on the exterior if connection bars 12 were formed as a tubular structure. If one were to follow the second embodiment's teachings, gear wheels and racks would be positioned on both sides of the tubular structure. Ex. 1015, Fig. 5 (depicting identical gear wheels 114 on either side of the tubular connection element 112). Therefore, each side of the tubular structure would have

gear wheels 14 and 16 and corresponding racks 15 and 10. Because the four racks (two of rack 10 and two of rack 15) and four gear wheels (two of gear wheel 14 and two of gear wheel 16) would be mounted externally in this modified embodiment, the interior of the pen injector would need to be redesigned to make additional space. Ex. 2107, ¶¶ 282-283. Otherwise, the pen injector would need to be widened to accommodate these extra components, which would run counter to a well-understood design objective of reducing the size of a pen injector for hand-held use. Ex. 2107, ¶ 283; Ex. 2163 at 169:12-21. Petitioner has not explained how this significant redesign can be accomplished without increasing its size.

Given the significant differences and the advantage provided by the open (not tubular) shape of connection bars 12, a POSA would not have been motivated to implement a sleeve shaped connection element in Møller's first embodiment. Ex. 2107, ¶¶ 282-284. Petitioner therefore has not articulated a sufficient reason motivating a POSA to modify Møller's first embodiment by substituting the parallel connection bars 12 with a tubular structure. *Unigene Labs., Inc. v. Apotex, Inc.*, 655 F.3d 1352, 1360 (Fed. Cir. 2011).

Accordingly, Møller does not teach or render obvious claim limitation [1.5], and thus does not render obvious claim 1.

2. A POSA Would Not Have Been Motivated to Modify Møller to Include Steenfeldt-Jensen's Externally-Threaded Dose Scale Drum and Internally-Threaded Housing

Claim 1 requires a "dose dial sleeve positioned within said housing, said dose dial sleeve comprising a helical groove configured to engage a threading provided by said main housing, said helical groove provided along an outer surface of said dose dial sleeve." Ex. 1001, claim 1. The Petition concedes that Møller "does not disclose 'a helical groove' that is 'provided along an outer surface of' [Møller's dose-setting] drum 17." Petition at 71. Nonetheless, Petitioner asserts that a POSA would be motivated to modify the inner threads of the tubular dose setting drum 17 and the outer thread 6 of tubular element 5 in Møller such that the tubular dose setting drum 17 instead comprised "a high-pitch helical groove as taught by Steenfeldt-Jensen on the outer surface" that engaged with a helical rib on the inner surface of the housing 1. Petition at 87; *id.* at 71, 85-87. A POSA, however, would not have been motivated to modify Møller as proposed for the reasons set forth below.

a) A POSA Would Not Have Been Motivated to Combine Moller With Steenfeldt-Jensen's Externally-Grooved Dose Scale Drum 80

Møller expressly teaches away from combining its invention with Steenfeldt-Jensen. Ex. 2107, ¶ 288. Møller explains that it is an objective of his invention "to provide an injection device, which combines the advantages of the

devices according to the prior art ***without adopting their disadvantages*** ….” Ex. 1015, [0011] (emphasis added). Møller expressly cites the exact dose scale drum from Steenfeldt-Jensen that Petitioner seeks to combine with Møller as an example of a disadvantageous prior art teaching, and proposes an embodiment with a completely different configuration. Specifically, Møller criticizes Steenfeldt-Jensen as follows:

> A similar gearing is provided in WO 99/38554 [Steenfeldt-Jensen's PCT counterpart] wherein the thread with the high pitch is cut in the outer surface of a dose setting drum and is engaged by a mating thread on the inner side of the cylindrical housing. ***However, by this kind of gearing relative large surfaces are sliding over each other so that most of the transformed force is lost due to friction between the sliding surfaces***. Therefore a traditional gearing using mutual engaging gear wheels and racks is preferred.

Ex. 1015, [0008] (emphasis added).[5] Møller's injection device pointedly, and intentionally, avoids the disadvantageous high-pitched and externally-grooved dose scale drum described by Steenfeldt-Jensen, and neither Petitioner nor its expert, as explained below, have demonstrated that a POSA would be motivated to disregard Møller's teaching against using it. Ex. 2107, ¶ 290. Møller thus teaches away from Steenfeldt-Jensen. *Polaris Indus.*, 882 F.3d at, 1069; *General Elec. Co.*

[5] WO99/38554 is the related PCT publication to Steenfeldt-Jensen. Ex. 2026.

v. United Techs. Corp., IPR2017-00428, Paper No. 38 at 24 (P.T.A.B. June 22, 2018).

In its Institution Decision, the Board preliminarily notes "that [Møller's] paragraph 8 states that 'traditional gearing using mutual engaging gear wheels and racks is *preferred*' (Ex. 1015 ¶ 8 (emphasis added)), which may indicate sliding surfaces may not be one of the disadvantages discussed in paragraph 11 of Moller." Paper 19 at 31. The Board misses the import of Patent Owner's argument: Møller teaches away from ***Steenfeldt-Jensen***'s high-pitch threading, not necessarily ***every*** threaded engagement. Møller states that an objective of his invention is "to provide an injection device, which combines the advantages of the devices according to the prior art ***without adopting their disadvantages*** …." Ex. 1015, [0011] (emphasis added). A POSA thus would not have read Møller's disclosures criticizing Steenfeldt-Jensen's high-pitch threads and concluded that it would have been obvious to combine Møller with the very reference it disparages and seeks to improve upon. Ex. 2107, ¶ 290; *Medichem, S.A. v. Rolabo, S.L.*, 437 F.3d 1157, 1165 (Fed. Cir. 2006).

Further, even if the Board were to find that these statements are not an express teaching away, the Board should be highly skeptical, in view of Møller's disclosure, that simply swapping features in Møller and Steenfeldt-Jensen are as

easy as Petitioner argues. It is telling that Petitioner makes no effort to address the concerns articulated by Møller. *Polaris Indus.*, 882 F.3d at 1069.

b) A POSA Would Not Have Been Motivated to Make the Relied-Upon Combination Due to a Purported Benefit Alleged by Petitioner

Despite Møller's teaching-away, Petitioner argues that a POSA would have been motivated to modify the internal threading on Møller's tubular dose setting drum 17 "[b]ecause the threaded engagement in Steenfeldt-Jensen is configured to reduce the friction between the sliding surfaces of the drum and housing, a POSA would have understood that this configuration would reduce the force needed to rotate the drum back into the housing during injection." Petition at 87. This argument fails.

Petitioner and Mr. Leinsing cite no evidence suggesting that a POSA would look beyond Møller's teachings for addressing undesirable thread friction. Nor would a POSA, because Møller teaches its own solution. Specifically, Møller teaches a "helical reset spring 36" that "exerts a torque approximately corresponding to the torque necessary to overcome the friction in the movement of the dose setting drum along the thread 6 so that the force which the user have to exert on the injection button is only the force necessary to drive the piston rod into the ampoule to inject the set dose." Ex. 1015, [0033]; Ex. 2107, ¶ 294. The

Petition does not address why a POSA would ignore this express teaching of a different solution in favor of a "solution" disparaged by Møller.

In sum, Møller expressly considered Steenfeldt-Jensen's teachings and rejected them as disadvantageous, proposing a different solution to the purported "problem." Petitioner is incorrect that "[a] POSA would have had reason to incorporate a high-pitch helical groove as taught by Steenfeldt-Jensen," let alone one that is "on the outer surface of Møller's drum." Because there is no apparent reason to modify Møller as Petitioner proposes, Petitioner has failed to show that it would have been obvious to combine Møller and Steenfeldt-Jensen. *KSR Int'l Co. v. Teleflex Inc.*, 550 U.S. 398, 418 (2007).

3. Møller With Steenfeldt-Jensen Does Not Teach or Render Obvious "said dose dial sleeve comprising a helical groove configured to engage a threading provided by said main housing, said helical groove provided along an outer surface of said dose dial sleeve"

Petitioner identifies Møller's dose-setting drum 17 as the claimed dose dial sleeve. Petitioner concedes, however, that dose-setting drum does not disclose a helical groove provided along its outer surface as required by claim 1. Nonetheless, Petitioner argues that it would have been "obvious to modify internal threading of drum 17 as an external threading that engaged the housing for the same rotational movement relative to the housing as disclosed in Steenfeldt-Jensen." Petition at 71. As explained in Section VI.C.2, however, a POSA would

not have been motivated to combine the teachings of Steenfeldt-Jensen's dose scale drum with Møller's pen injector. Ex. 2107, ¶ 304. Further, neither Petitioner nor its expert have offered any reasoning for why a POSA would have switched the threading of Møller's dose setting drum from internal to external as described in Steenfeldt-Jensen.

Indeed, configuring Møller's housing 1 to have an internal rib that engaged an external groove of the dose setting drum 17 would be problematic. First, a threaded engagement between housing 1 and dose setting drum 17 would interfere with helical reset spring 36. Ex. 1015, Fig. 1 (element 36); Ex. 2107, ¶ 305. This helical reset spring 36 exists between the housing 1 and dose setting drum 17, precisely where Petitioner proposes to place a threaded connection. Neither Petitioner nor its expert explains how their proposed modification would avert interference between the threads and the spring, which could cause the device to malfunction. Ex. 2107, ¶ 305.

Second, moving the threads from the inside of dose setting drum 17 to the outside increases the frictional torque experienced during dose dialing and injection, which would be antithetical to Møller's teachings. Ex. 2107, ¶ 306. As with any thread engagement, frictional forces arise from the thread surface sliding past each other. *Id*. When the dose setting drum's threads, and the resulting frictional forces, are placed further from the axis of rotation, counter-torque

increases. *Id*. The user must overcome this greater counter-torque to inject a dosage of medication by exerting a greater injection force. *Id*. Therefore, a POSA would not have been motivated to modify Møller to have threads between the housing 1 and dose scale drum 17, and a POSA would not have had a reasonable expectation of success in making this modification. *Id*.

Thus, the Petition fails to show that Møller with Steenfeldt-Jensen teaches or renders obvious "said dose dial sleeve comprising a helical groove configured to engage a threading provided by said main housing, said helical groove provided along an outer surface of said dose dial sleeve" as required by claim 1. The Petition therefore fails to show that claim 1 is obvious.

VII. OBJECTIVE INDICIA OF NONOBVIOUSNESS

The PTAB has recognized that "objective evidence of nonobviousness[] may lead to a conclusion that the claimed invention would not have been obvious to one with ordinary skill in the art." *Lupin Ltd. v. Senju Pharm. Co*., No. IPR2015-01100, Paper 70 at 20 (P.T.A.B. Sep. 12, 2016). Objective indicia help "guard against slipping into use of hindsight, and to resist the temptation to read into the prior art the teachings of the invention in issue." *Graham v. John Deere Co. of Kan. City*, 383 U.S. 1, 36 (1966). Objective indicia of nonobviousness may include long-felt but unresolved need for the invention, commercial success of embodying products, and industry praise, among other factors, which the PTAB must evaluate

before reaching an obviousness determination. *Id*. at 35-36; *Transocean Offshore Deepwater Drilling Inc. v. Maersk Drilling USA, Inc*., 699 F.3d 1340, 1349-50 (Fed. Cir. 2012). The Federal Circuit has held that evidence of objective indicia "may often be the most probative and cogent evidence in the record." *WBIP, LLC v. Kohler Co.,* 829 F.3d 1317, 1328 (Fed. Cir. 2016).

A nexus must exist between the objective indicia and the claimed invention. *WBIP*, 829 F.3d at 1331. The nexus inquiry is directed to the invention as a whole and not to individual limitations. *Id*. at 1330. A nexus is presumed to exist "when the patentee shows that the asserted objective evidence is tied to a specific product and that product 'is the invention disclosed and claimed in the patent.'" *Id*. at 1329. Here, the objective indicia and nexus to the claimed invention confirm the non-obviousness of the 069 Patent.

A. The LANTUS® SoloSTAR® Practices the Challenged Claim of the 069 Patent

As an initial matter, Sanofi's LANTUS® SoloSTAR®[6] product practices the challenged claim. Ex. 2107, ¶¶ 472-512. As explained by Prof. Slocum, the inventions in the challenged claim describe a set of components that elegantly

[6] LANTUS® is the commercial name for Sanofi's insulin glargine formulation, and LANTUS® SoloSTAR® is the commercial name for LANTUS® packaged in the SoloSTAR® pen injector.

work together to provide the user a mechanical device that is easy to use and includes a combination of desirable features and properties, such as (i) low injection force, (ii) short injection stroke length or higher maximum dose per injection, and (iii) a relatively small number of components that decrease the complexity of the device. *Id*. For example, Prof. Slocum confirms that the claimed components and interfaces, such as the threaded engagements, piston rod, drive sleeve, and tubular clutch, are reflected in the LANTUS® SoloSTAR®. *Id*.

B. The LANTUS® SoloSTAR® Satisfied Previously Unresolved Needs for Pen Injectors Due To the Inventions of the 069 Patent

As set forth below, due to the contributions of the above features described by Prof. Slocum, the LANTUS® SoloSTAR® satisfied long-felt, but unresolved needs existing in commercially available pen injectors.

Dr. Robin Goland, a leading endocrinologist and co-director of the Naomi Berrie Diabetes Center at Columbia University, explains that for patients dealing with a lifelong condition that requires daily medication/care, as with diabetes, anything that can be done to reduce the burden of living with such a condition is a huge benefit. Ex. 2111 ¶ 22. For example, people suffering from diabetes experience higher rates of deterioration of fine motor skills that impact hand–eye coordination, balance, and dexterity, among other basic skills. Ex. 2111 ¶ 23. These problems can be especially pronounced with the elderly. *Id.* Moreover, people with diabetes suffer from higher rates of carpal tunnel syndrome (diabetic

hand), stiff hand syndrome, shoulder-hand syndrome (reflex dystrophy), and limited joint mobility, the latter of which is especially common with younger patients. Ex. 2111 ¶ 24. Each of these conditions interferes with the patient's basic life activities, in particular, with the ability to administer diabetic medications. Ex. 2111 ¶ 25. Accordingly, diabetic patients need an easy-to-use injection device with a low injection force to reduce the burden on the patient and increase the likelihood of the patient adhering to their prescribed therapy. Ex. 2111 ¶¶ 24-26.

Prior to the launch of LANTUS® SoloSTAR®, there were multiple injection pens on the market for administering insulin or an insulin analog – *e.g.*, Levemir FlexPen and Lantus OptiClik in the long-acting category, and the Humalog KwikPen in the rapid-and intermediate-acting categories, among many others. These injection pens, however, had numerous shortcomings and design flaws that resulted in significant injection force. A 2007 study, for example, found that FlexPen ranked far below SoloSTAR in injection force. Ex. 2143; Ex. 2144. The OptiClik likewise had many deficiencies, including a direct drive system that resulted in a high injection force. *See* Ex. 2107, ¶ 646. Numerous other studies confirmed the relatively high injection force of each of the pens on the market at the time of and prior to the launch of SoloSTAR. Ex. 2111 ¶¶ 23-25 (discussing studies); Ex. 2109 ¶¶ 52-55 (discussing studies). As Dr. Goland explains, the high injection force of these prior art pens made the devices difficult to use and thus

increased the risk of patients not adhering to their insulin and insulin-analog therapy. Ex. 2111 ¶¶ 33-35.

The LANTUS® SoloSTAR® revolutionized the injection pen market, in large part because the LANTUS® SoloSTAR® was easy to use. Ex. 2142, Press Release, Prix Galien, 2009. As Dr. Goland explains, "the pen is so easy-to-use because of the low injection force, or the amount of pressure a patient needs to apply to the injection button in order to inject the dose." Ex. 2111 ¶ 33. This is reflected in literature at the time that demonstrates that the LANTUS® SoloSTAR® required a greatly reduced injection force. Ex. 2116 at 7. Moreover, these papers confirm that injection force was a primary concern.

And, as recited in the 069 Patent, the primary intent of the invention is to address these specific problems in the prior art – "The illustrated embodiment . . . helps reduce the overall force required for a user to cause medicinal product to be dispensed." Ex. 1001, 3:44-47. Indeed, as reflected in a related patent, "Surprisingly it was found that the drive mechanism according to instant invention without having a unidirectional coupling provides a valuable technical alternative

for drive mechanisms, wherein reduced force is needed to actuate the mechanism."[7] Ex. 1005, 1:66-2:3.

The industry extensively recognized SoloSTAR for solving the problem of needing to deliver high doses with a short dial extension and with low injection force. Ex. 2128 ; Ex. 2117; Ex. 2123 at 6; Ex. 2184 at 2; Ex. 2185 at 1.

Patients likewise expressed a preference for SoloSTAR for its low injection force. Ex. 2143; Ex. 2121 at 2, 9 (finding that 7 out of 10 patients now prefer the lower injection force of SoloSTAR® to competitor products and in 2008 it accounted for "41% of all growth in the global injectable insulin market"); Ex. 2144.

The product has thus satisfied a long-felt but unmet need for an easy-to-use pen that was particularly well suited to administer medication with a low injection force.

C. The Lantus® SoloSTAR® Received Industry Praise for its Patented Features

The nonobviousness of the 069 patent is further demonstrated by the high level of praise and industry recognition that Sanofi and DCA, the design firm with whom Sanofi partnered in creating SoloSTAR®, received for the designs

[7] This description is from the 008 Patent, which is related to the 069 Patent. *See* footnote 2, *infra*.

embodied in the SoloSTAR® device. In 2009, for example, SoloSTAR won the Gold, International Export, and Grand Prix awards at the Design Business Association (DBA) Design Effectiveness Awards. Ex. 2121. The DBA is a design organization based in the UK that is interested in how a design commercially impacts a company's business. The case study of SoloSTAR for the DBA Awards describes the SoloSTAR's inventiveness as "suitably ambitious" and explains that "SoloSTAR® is the first disposable insulin pen to combine very low injection force (which provides a smooth injection experience for patients) with 80 units maximum dose capability, an important breakthrough." *Id*. at 3. SoloSTAR also won the Good Design Award by the Chicago Athenaeum Museum of Architecture and Design. Ex. 2201. In connection with this award, and as recognition of its inventiveness, the Lantus® SoloSTAR® device was put into the permanent Design Collection of the Chicago Athenaeum Museum of Architecture and Design. Ex. 2109, ¶ 73.

Additionally, in 2007, SoloSTAR® won the Good Design Award by the Chicago Athenaeum Museum of Architecture and Design. *Id*. The criteria for this award are "quality design of the highest form, function, and aesthetics a standard beyond ordinary consumer products and graphics." *Id*. Christian K. Narkiewicz-Laine, President of the Chicago Athenaeum Museum of Architecture and Design noted that "SoloSTAR represents a design for social good and for humanitarian

concerns." *Id*. In connection with this award, the Lantus® and Apidra® SoloSTAR® devices were put into the permanent Design Collection of the Chicago Athenaeum Museum of Architecture and Design, as recognition of its inventiveness. *Id*.

Finally, at the Prix Galien USA 2009 Award, which "recognize[s] innovative biopharmaceutical drugs and medical technologies" and "is considered the industry's highest accolade for pharmaceutical research and development — equivalent to the Nobel Prize," Sanofi and DCA were both finalists. *Id*. ¶ 74.

In sum, Sanofi and DCA received a high level of acclaim for the design of the SoloSTAR® device.

D. The Commercial Success of the LANTUS® SoloSTAR® Is Attributable to the Inventions of the 069 Patent

The tremendous commercial success of LANTUS® SoloSTAR® is further objective evidence of non-obviousness. The commercial success is demonstrated by the contribution of LANTUS® SoloSTAR® to the growth of the LANTUS® franchise overall, and by the strong performance of LANTUS® SoloSTAR® when compared to other long-acting insulin and insulin analog pens.[8]

---

[8] Although Patent Owner's commercial success evidence focuses on the long-acting insulin and insulin-analog market in which LANTUS® SoloSTAR® competes, the device satisfied long-felt needs left unresolved by inferior injection

As explained by Dr. Grabowski, LANTUS® SoloSTAR® has enjoyed fast and long-sustained growth in terms of dollar sales, new prescriptions, and total prescriptions. *Id*. ¶ 12. The commercial success of LANTUS® SoloSTAR® is also demonstrated by the overall levels and shares of dollar sales, new prescriptions, and total prescriptions, as well as the profitability and formulary placement achieved by LANTUS® SoloSTAR®. *Id*. This success is notable because sales and prescriptions for LANTUS® SoloSTAR® remained strong despite the entry of several competing long-acting insulin and insulin analog drugs (all in pen form) starting in 2015. *Id*. Furthermore, the LANTUS® SoloSTAR® achieved the highest level of sales among long-acting insulin and insulin analog pens even though it launched after several other long-acting insulin and insulin analog pens, including the Levemir® FlexPen® (the commercial embodiment of Steenfeldt-Jensen), which was the first long-acting insulin or insulin analog product available in a disposable pen. *Id*.

The success of LANTUS® SoloSTAR® is further evidenced by its substantial growth relative to LANTUS® OptiClik®, which is an older pen injector product that included the same insulin glargine formulation as LANTUS®

---

pen devices in other markets, such as the rapid-acting and intermediate acting markets.

SoloSTAR®. *Id*., ¶ 12. For example, new prescriptions of LANTUS® OptiClik® totaled 461 thousand in the third year after its launch, and total prescriptions amounted to 1.2 million by this time. By comparison, new prescriptions of LANTUS® SoloSTAR® (using the exact same insulin formula) totaled 1.6 million in the third year after its launch, and total prescriptions amounted to 3.9 million by this time. *Id*., ¶ 37.

As explained by Prof. Slocum and Dr. Grabowski, the features of the device disclosed and claimed in the 486 Patent and used in LANTUS® SoloSTAR® contributed to its commercial success. Ex. 2109 ¶ 53; Ex. 2107, ¶¶ 472-512. For example, there was a long-felt but unfulfilled need for an easy-to-use pen device with low injection force. As explained in the supporting declaration of Dr. Goland, the SoloSTAR® device satisfied that need and drove patient adoption. Additionally, as explained in the supporting declaration of Dr. Grabowski, the SoloSTAR® device won numerous design awards, and achieved significant industry praise. Finally, as explained above and in the supporting declaration of Prof. Slocum, the SoloSTAR® device embodies the challenged claims of the 486 patent. Thus, there is a nexus between the claimed invention in the 486 patent and the commercial success of LANTUS® SoloSTAR®.

To the extent Petitioner argues that Patent Owner's evidence of commercial success is not due to the claimed invention, but rather, to factors beyond the

claimed invention such as, *e.g.*, marketing, such arguments should be rejected. In particular, Dr. Grabowski analyzed marketing expenditures for long-acting insulin products and determined that sales of LANTUS® SoloSTAR® exceeded sales for other well-marketed long-acting insulin products despite the fact that total marketing expenditures for LANTUS® SoloSTAR® were in line with, or were lower than, many other long-acting insulin products. Ex. 2109 ¶¶ 16, 64-69. Patent Owner's marketing of LANTUS® SoloSTAR® therefore does not explain the commercial success of LANTUS® SoloSTAR®.

Moreover, to the extent Petitioner argues that Patent Owner's evidence of commercial success is due to alleged "blocking patents" covering the glargine molecule that is used in the production of the active ingredient in Lantus®, any such argument would be misplaced. First, the law does not mandate across-the-board-discounting of commercial success simply because other patents cover components of the product. Rather, the PTAB is directed to weigh the evidence on a case-by-case basis, in light of the specific commercial success argument being made. *Acorda Therapeutics, Inc. v. Roxane Labs., Inc.*, 903 F.3d 1310, 1339 (Fed. Cir. 2018), *pet. for cert filed*, No. 18-1280 (U.S. Apr. 8, 2019).

Second, as described above, the success of Lantus® SoloSTAR® cannot be attributed solely to the insulin glargine molecule because Lantus® OptiClik® used the exact same Lantus® formulation and failed to achieve the success of

SoloSTAR®. Thus, the success of SoloSTAR® must be attributable at least in part to its unique design covered by the 069 patent.

Third, Sanofi's earlier patents on the insulin glargine molecule did not prevent others from entering the market for non-glargine, long-acting insulin products and competing with Lantus® SoloSTAR®. As explained above, numerous other competitive pen devices existed prior to Lantus SoloSTAR®. The Levemir FlexPen, for example, was a disposable pen device that delivered long-acting insulin. Sanofi's patents on the insulin glargine molecule do not cover the Levemir formulation and, indeed, did not prevent competition between those devices. The tremendous success of Lantus® SoloSTAR®, as compared to pens with long-acting insulins that failed to address the long-felt but unfilled need for a low injection force device, therefore shares a strong nexus with the claimed invention.

Thus, the commercial success of LANTUS® SoloSTAR®, which is covered by claim 1 of the 069 Patent, confirms the nonobviousness of the 069 Patent.

VIII. CONCLUSION

For the reasons set forth above, Sanofi respectfully requests that the Board affirm the patentability of challenged claim 1.

Dated: June 25, 2019

Respectfully submitted,

/Elizabeth Stotland Weiswasser/
Elizabeth Stotland Weiswasser
Reg. No. 55,721
Anish R. Desai
Reg. No. 73,760
Sudip K. Kundu
Reg. No. 74,193
Kathryn M. Kantha
Reg. No. 70,371
Weil, Gotshal & Manges LLP
767 Fifth Avenue
New York, NY 10153
Phone: 212-310-8000
elizabeth.weiswasser@weil.com
anish.desai@weil.com
sudip.kundu@weil.com
kathryn.kantha@weil.com

Adrian C. Percer
Reg. No. 46,986
Brian C. Chang
Reg. No. 74,301
Weil, Gotshal & Manges LLP
201 Redwood Shores Parkway
Redwood Shores, CA 94065
Phone: 650-802-3124
adrian.percer@weil.com
brian.chang@weil.com

William S. Ansley
Reg. No. 67,828
Matthew D. Sieger
Reg. No. 76,051
Weil, Gotshal & Manges LLP
2001 M Street NW, Ste. 600
Washington, D.C. 20036
Phone: 202-682-7000
sutton.ansley@weil.com

matthew.sieger@weil.com

Sanofi.IPR.Service@weil.com

CERTIFICATE OF COMPLIANCE

1. The undersigned certifies that this brief complies with the type volume limitations of 37 CFR § 42.24(a)(1)(i). This brief contains 13,121 words (excluding the table of contents, the table of authorities, mandatory notices under 37 CFR § 42.8, the certificate of service, certificate of compliance, and appendix of exhibits), as calculated by the "Word Count" feature of Microsoft Word 2016, the word processing program used to create it.

2. The undersigned further certifies that this brief complies with the typeface requirements of 37 CFR § 42.6(a)(2)(ii) and typestyle requirements of 37 CFR § 42.6(a)(2)(iii). This brief has been prepared in a proportionally spaced typeface using Microsoft Word 2016 in Times New Roman 14 point font.

Dated: June 25, 2019

Respectfully submitted,

/Elizabeth Stotland Weiswasser/

Elizabeth Stotland Weiswasser
Reg. No. 55,721
Weil, Gotshal & Manges LLP
767 Fifth Avenue
New York, NY 10153
Phone: 212-310-8000
elizabeth.weiswasser@weil.com

CERTIFICATE OF SERVICE

The undersigned hereby certifies that on June 25, 2019, the foregoing Patent Owner's Response and accompanying exhibits were served via electronic mail upon the following:

Richard Torczon
Wesley Derryberry
Tasha Thomas
WILSON SONSINI GOODRICH & ROSATI
1700 K Street NW, 5th Floor
Washington, D.C. 20006
rtorczon@wsgr.com
wderryberry@wsgr.com
tthomas@wsgr.com

Douglas H. Carsten
Jeffrey W. Guise
Arthur Dykhuis
Elham F. Steiner
WILSON SONSINI GOODRICH & ROSATI
12235 El Camino Real, Suite 200
San Diego, CA 92130
dcarsten@wsgr.com
jguise@wsgr.com
adykhuis@wsgr.com
esteiner@wsgr.com

Lorelei Westin
WILSON SONSINI GOODRICH & ROSATI
650 Page Mill Road
Palo Alto, CA 94304
lwestin@wsgr.com

Franklin Chu
WILSON SONSINI GOODRICH & ROSATI
701 Fifth Avenue, Suite 5100
Seattle, WA 98104
ychu@wsgr.com

Nicole W. Stafford
WILSON SONSINI GOODRICH & ROSATI
900 South Capital of Texas Highway
Las Cimas, IV Fifth Floor
Austin, TX 78746
nstafford@wsgr.com

/Timothy J. Andersen/

Timothy J. Andersen
Case Manager
Weil, Gotshal & Manges LLP
2001 M Street, NW, Suite 600
Washington, DC 20036
timothy.andersen@weil.com