UNITED STATES PATENT AND TRADEMARK OFFICE

BEFORE THE PATENT TRIAL AND APPEAL BOARD

MYLAN PHARMACEUTICALS INC.,
Petitioner,

v.

SANOFI-AVENTIS DEUTSCHLAND GMBH,
Patent Owner.

Case IPR2019-01658
Patent No. RE47,614

PETITION FOR *INTER PARTES* REVIEW

TABLE OF CONTENTS

I. INTRODUCTION

Petitioner Mylan Pharmaceuticals Inc. ("Mylan") seeks an *inter partes* review ("IPR") of claims 1-18 of U.S. Patent RE47,614 ("Harms"; EX1001), which is assigned to Patent Owner ("Sanofi"). This petition shows a reasonable likelihood that claims 1-18 are unpatentable. 35 U.S.C. 314(a).

Harms claims a configuration for securely holding a cartridge within a drug-delivery device that a person of ordinary skill ("POSA") would have considered obvious. The claimed device includes a cartridge-retaining member, secured to the device's housing, for accepting and retaining a drug cartridge. To ensure the cartridge does not move within the cartridge-retaining member, the device incorporates a spring element—a spring washer—to apply an axially-directed biasing force that presses and holds the cartridge against the cartridge-retaining member. To ensure the necessary biasing force, the spring washer includes at least two fixing elements to hold the washer in place.

As this petition demonstrates, the notion that a spring element, like a spring washer, may be used to secure components against movement within a device was nothing new. And the various means by which this could be accomplished were familiar, well-understood, and readily implemented by those skilled in the art. In sum, the Harms claims are nothing more than a predictable use of well-established

components for the well-understood purpose of securing a component against movement within a drug-delivery device.

II. MANDATORY NOTICES

A. Real Parties-In-Interest

Mylan's real parties-in-interest are Mylan Pharmaceuticals Inc., Mylan Inc., and Mylan GmbH (Mylan N.V. subsidiaries); Biocon Biologics India Limited, Biocon Research Ltd. and Biocon Ltd.; and Becton, Dickinson and Company.

B. Related Matters

Pending U.S. Application No. 16/538,503 is a continuation of Harms. IPR2019-01657 also requests IPR of Harms.

C. Identification of Counsel and Service Information

Lead Counsel	First Back-Up Counsel
Richard Torczon, Reg. No. 34,448 Wilson Sonsini Goodrich & Rosati PC 1700 K Street N.W., 5th Floor, Washington, DC 20006 Tel.: 202-973-8811; Fax: 202-973-8899 Email: rtorczon@wsgr.com	Tasha Thomas, Reg. No. 73,207 Wilson Sonsini Goodrich & Rosati PC 1700 K Street N.W., 5th Floor, Washington, DC 20006 Tel.: 202-973-8883; Fax: 202-973-8899 Email: tthomas@wsgr.com

Back-Up Counsel	
Douglas Carsten, Reg. No. 43,534 Wilson Sonsini Goodrich & Rosati PC 12235 El Camino Real San Diego CA 92130 Tel.: 858-350-2300; Fax: 858-350-2399 Email: dcarsten@wsgr.com	Wendy L. Devine, Reg. No. 61,309 Wilson Sonsini Goodrich & Rosati PC One Market Plaza, Spear Street Tower, Suite 3300 San Francisco, CA 94105-1126 Tel.: 415-947-2027 Fax: 415-947-2099 Email: wdevine@wsgr.com

Please direct all correspondence to lead counsel and back-up counsel at the contact information above. Mylan consents to electronic-mail service at 34943.682-WASHER.palib1@matters.wsgr.com and all email addresses above. A power of attorney accompanies this petition.

III. CERTIFICATIONS

Harms is available for IPR. Mylan is not barred or estopped from requesting IPR on these grounds.

IV. IDENTIFICATION OF CHALLENGE; STATEMENT OF PRECISE RELIEF REQUESTED

Mylan seeks cancellation of the challenged claims for the reasons stated below, supported with exhibits, including a declaration from Professor Arthur

Erdman (EX1004). The claims are unpatentable under pre-AIA 35 U.S.C. 103 on these obviousness grounds:

Ground	Claims	Basis
1	1-18	U.S. Patent 6,648,859 ("Bitdinger," EX1009), GB Patent 743,839 ("Schofield"; EX1010), and U.S. Patent 4,144,957 ("De Gennes," EX1008)

V. HARMS

Harms generally relates to a drug-delivery device. EX1001, Abstract, 1:26-29; EX1004, ¶22. The drug-delivery device 5 (FIG. 1 below) includes four primary components: (1) "housing" 10; (2) "cartridge" 15; (3) "cartridge retaining member" 45; and (4) "spring washer" 50.[1]

[1] In this petition, "proximal" indicates the end where a user actuates the device to dispense a dose of medicine, and "distal" indicates the end where medicine is dispensed from the device. *See* EX1004, ¶22 n.2; EX1001, 4:23-24, 5:18-20.

FIG 1

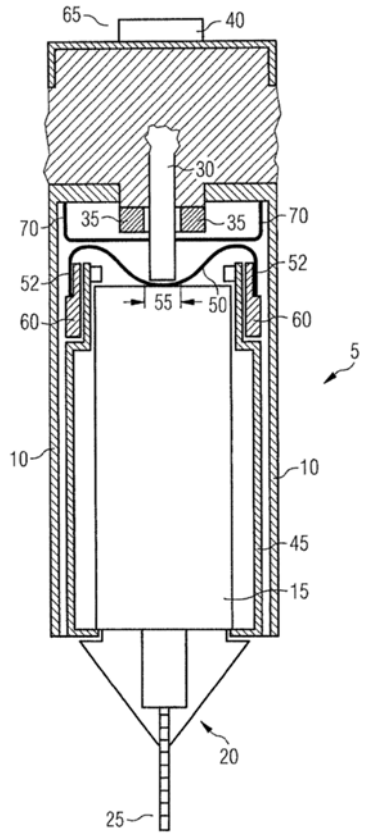

Housing 10 houses cartridge 15, which, at its distal end (bottom in the above figure), includes needle unit 20 through which a drug is dispensed from the cartridge. EX1001, 4:17-27, FIG. 1; EX1004, ¶24. Cartridge 15 is inserted into cartridge-retaining member 45, "which is (releasably) secured to the housing 10." EX1001, 4:30-32; EX1004, ¶25. Once secured, the cartridge's distal end abuts the cartridge-retaining member's distal end and "movement of the cartridge 15 in the distal direction is prevented by the cartridge retaining member 45." EX1001, 5:4-9, FIG. 1; EX1004, ¶25. In the described embodiment, cartridge-retaining member 45 includes a threaded proximal end that threads onto sleeve member 60, which is

fixed to housing 10 using, for example, laser-welding means. *See* EX1001, 5:28, 6:12-14, 7:25-27, FIG. 4; EX1004, ¶25.

At the cartridge's proximal end, spring washer 50 is arranged within housing 10. EX1001, 5:10-11, FIGS. 1, 4; EX1004, ¶26. "Spring washer 50 exerts a force on the cartridge 15 in the distal direction and secures the cartridge against movement with respect to the cartridge retaining member 45 and against movement with respect to the housing 10." EX1001, 5:11-15; EX1004, ¶26. To exert the force, spring washer 50 is fixed relative to housing 10 using fixing elements 52, which (as shown below in FIG. 5) extend axially from the spring washer and snap-fit onto sleeve member 60, rotationally and axially fixing the washer relative to the housing. EX1001, 5:25-26, 5:29-35; *see also id.*, 5:54-67 (describing alternative form of fixing elements), 6:41-46 (explaining washer may be fixed to other components of the device), 5:44-53 (explaining fixing elements 52 may also serve as "positioning elements," which keep the spring washer "in a determined orientation"), 7:16-20, FIGS. 2, 4; EX1004, ¶26.

FIG 5

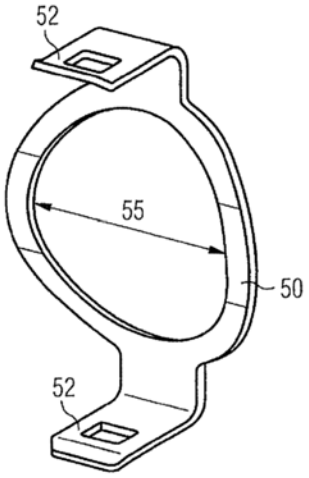

In some embodiments, further washer 70, which has a higher spring constant, is arranged on the spring washer's proximal side to "limit[] the movement of the spring washer 50 such that the spring washer 50 is not plastically deformed." EX1001, 6:47-55, 6:57-60, 7:34-44 (explaining further washer 70 may be a disk or spring washer), 6:63-65, 7:5-9, FIGS. 1, 3-4, 6; EX1004, ¶27. A color-coded annotation of FIG. 4 shows this configuration, where cartridge 15 is blue, cartridge-retaining member 45 is red, spring washer 50 and further washer 70 are green, and housing 10 and sleeve member 60 are purple. *See* EX1004, ¶28. As the figure shows, by securing cartridge-retaining member 45 to housing 10, the curved, elastic base of spring washer 50 exerts a distally-directed biasing force on the cartridge (shown by arrow), which presses the cartridge against the cartridge-retaining member's distal end to axially fix the cartridge during use. *Id.*, ¶29; *see also* EX1001, 6:17-30, FIG. 1.

FIG 4

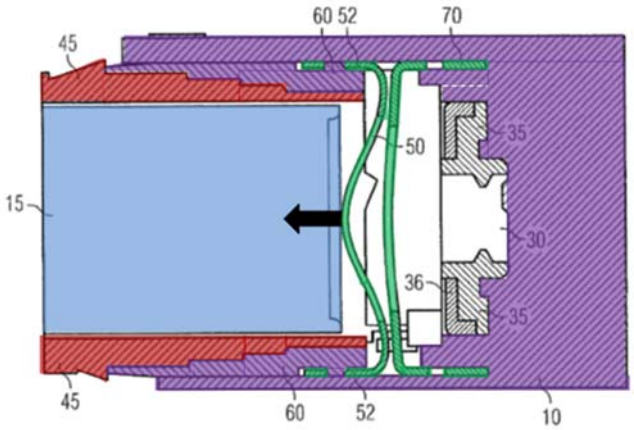

See EX1004, ¶28.

Injection is accomplished by distal movement of a piston rod 30, which pushes a piston (not shown) within the cartridge, dispensing medicine from the device. EX1001, 4:38-45; EX1004, ¶30. To allow the piston rod's movement, both spring washer 50 and further washer 70 contain openings through which the piston rod passes through. EX1001, 5:20-24; EX1004, ¶30.

According to Harms, the spring washer's resilience allows cartridges with different lengths to be installed and manufacturing tolerances to be compensated, while simultaneously reducing or even preventing axial movement of the cartridge in the cartridge-retaining member. EX1001, 2:1-15; *see also id.*, 6:30-36; EX1004, ¶31.

Harms is a reissue of U.S. Patent 9, 132,237 ("the '237 patent"), which claims priority to a European application filed on October 13, 2008. EX1001, cover.

A. Challenged Claims

Harms includes 18 claims, including independent claims 1 and 16-18. Claims 1 and 17-18 each recite a drug-delivery device having the four primary components described above. Claim 16 recites a method of manufacturing a drug-delivery device having these four components. Illustrative claim 1 is reproduced below:

> 1. A drug delivery device comprising:
>
> a housing with a proximal end and a distal end,
>
> a cartridge adapted to accommodate a drug,
>
> a cartridge retaining member adapted to retain the cartridge, the cartridge retaining member releasably secured to the housing, and
>
> a spring washer arranged within the housing so as to exert a force on the cartridge and to secure the cartridge against movement with respect to the cartridge retaining member,
>
> wherein the spring washer has at least two fixing elements configured to axially and rotationally fix the spring washer relative to the housing.

Claims 2-15 each depend directly or indirectly from claim 1, and recite additional features of the drug-delivery device, including spring-washer type, fixing-element positioning, a piston rod for dispensing the drug from the cartridge, a threaded sleeve member for fixing the spring washer, and a further washer for limiting movement of the spring washer.

B. Prosecution History

During prosecution of the ’237 patent, the claims were rejected, in part, as anticipated over prior art. *See* EX1003, 371. In response, Sanofi amended the claims to recite that the cartridge-retaining member was “releasably” secured to the housing, *id.*, 393-95, but the Examiner was unpersuaded and upheld the rejection, *id.*, 412-13. Sanofi further amended the claims to recite that the spring washer includes “at least two fixing elements” for axial and rotational fixation of the washer. *Id.*, 429. The Examiner allowed the claims, citing the latter amendments as reasons for allowance. *Id.*, 448.

During the reissue proceedings, Sanofi submitted new independent claims 17-19, leaving original claims 1-16 unamended. EX1002, 16-20. Notably, new claims 17-19 each eliminated the requirement that the cartridge-retaining member be “releasably” secured to the housing, thus broadening the original claims’ scope. *Id.* The Examiner made no prior-art rejections, but did note “surrender-generating limitations” that precluded broadening the claims, including the “releasably” secured limitation. *Id.*, 249-53. The Examiner rejected claim 19 for improper recapture of the surrendered subject matter. *Id*. After canceling claim 19 and addressing other formality objections, the Examiner allowed claims 1-18. *Id.*, 726-28.

VI. LEVEL OF ORDINARY SKILL

A POSA prior to October 13, 2008, would include someone who had, through education or experience, the equivalent of a bachelor's degree in mechanical engineering, or a related field, and an additional two years of work in, or at least an understanding of, the basics of medical-device design and manufacturing techniques. EX1004, ¶¶36-41. The POSA would have been familiar with elements commonly used to bias and secure components within mechanical devices (*e.g.*, spring elements, fastening structures) and the mechanical principles involved in using those elements. *Id.*, ¶38. As demonstrated below in section VIII.A, the POSA would have been familiar with the various spring types (including spring-washer types), the purposes for which they were used, their various design considerations (*e.g.*, load-deflection characteristics), and the materials and manufacturing processes commonly used to make them. *Id.*, ¶39. Professor Erdman explains that, given this general knowledge of spring mechanics and manufacturing, and their widespread use across many industries, a POSA, in developing a spring system for a drug-delivery device, would have considered devices in other fields that exploited the biasing force of springs in a manner analogous to the sought use (*e.g.*, axial securement). *Id.* This understanding of the POSA is confirmed by Harms' specification. *Id.*, ¶40.

VII. CLAIM CONSTRUCTION

The claim terms should be given their ordinary and customary meaning, consistent with the specification, as a POSA understood them. 37 C.F.R. §42.100(b); *see* EX1004, ¶42. Some claim terms, however, may warrant means-plus-function construction. In case these terms are construed as means-plus-function limitations, Mylan identifies corresponding structure for the claimed functions. 37 C.F.R. §42.104(b)(3); *see also* EX1004, ¶¶43-47.

1) **"cartridge retaining member"**: The independent claims recite a "cartridge retaining member" that "is adapted to retain" (claims 1 and 16-17) or "configured to accept and retain" (claim 18) the cartridge and is "releasably secured" (claims 1 and 16) or "secured" (claims 17-18) to the housing. The specification identifies cartridge-retaining member 45 as the corresponding structure. *See* EX1001, 4:30-36. FIGS. 1 and 4 (below) illustrate this structure in cross-section, annotated in red:

FIG 1

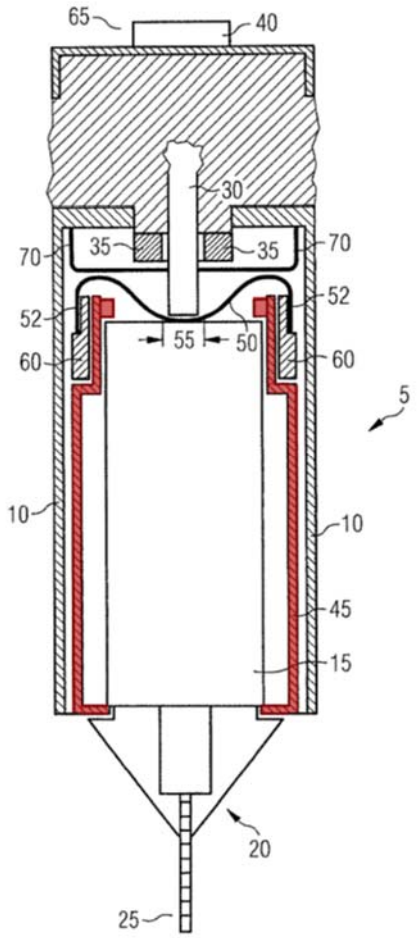

FIG 4

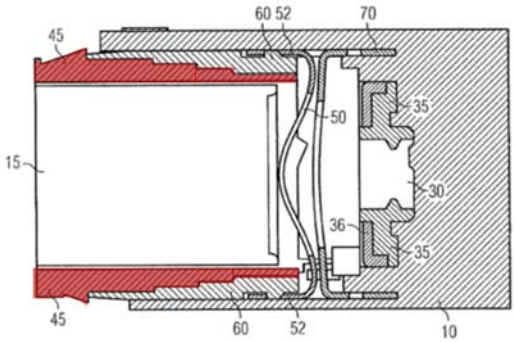

See EX1004, ¶45.

Cartridge-retaining member 45 is shown to have an inner cavity for receiving and holding at least a portion of the cartridge within it. *See, e.g.*, *id.*, 5:4-6. It also includes a proximal end that directly or indirectly secures to housing 10 through a threaded connection. *See id.*, 6:12-14; EX1004, ¶45.

2) **<u>"fixing elements"</u>**: Each of the independent claims recites a spring washer having "fixing elements" that "fix" ("axially and rotationally" in claims 1 and 16-17) the washer relative to the housing. The specification identifies fixing

elements 52 as the corresponding structure, shown below in FIG. 5.

FIG 5

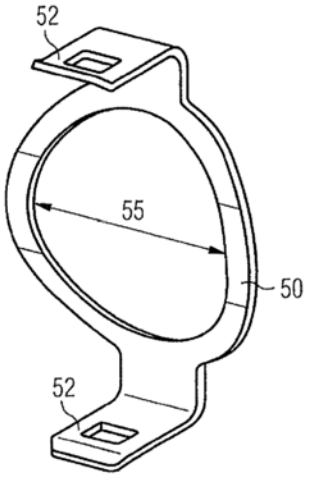

The specification describes fixing elements 52 as "hook-shaped" axial extensions that protrude from the washer's base. *See, e.g.*, EX1001, 5:29-35, 7:16-20, FIGS. 2, 4. These extensions snap-fit directly or indirectly onto the housing. *Id.*; EX1004, ¶46. Alternatively, the specification describes the fixing elements as protrusions that "extend from the outer circumference of the spring washer" and are "arranged and/or axially guided within a respective guide slot" secured to the housing. *Id.*, 5:61-67; EX1004, ¶46.

VIII. PRIOR ART

The following sections provide an overview of the relevant state of the art in October 2008 and a summary of the applied references.

A. Background: drug-delivery devices and spring washers

The components of the claimed drug-delivery devices were well known and widely used before October 13, 2008. As noted above, the claims generally recite

devices including a housing, cartridge, cartridge-retaining member, and spring washer. Drug-delivery devices routinely dispensed medicine from a cartridge within a housing, and such cartridges were commonly retained by another component (*i.e.*, a cartridge-retaining member) secured to the housing. EX1004, ¶¶49-50 (citing EX1006, ¶¶23, 31, FIGS. 1, 4; EX1009, 1:66-2:25, 4:46-49, 5:24-28, FIGS. 1-5; EX1010, 1:58-74, 2:35-71, FIGS. 1-3; EX1007, 2:30-49, 3:2-20, FIGS. 1-4). Depending on how the cartridge is inserted into the device, the cartridge-retaining member could be permanently secured to the housing (*e.g.*, during manufacturing of the device, such as in a single-use injector pen) or releasably secured through known connection methods, which allowed for active removal and insertion of cartridges by a user. *Id.*, ¶50 (citing EX1006, ¶¶23, 29, FIG. 1; EX1009, 4:21-42, 5:24-28, 6:11-20, FIGS. 1-5, 7; EX1010, 2:35-71, FIGS. 1-3; EX1007, 3:2-20, FIGS. 1-4; EX1011, Abstract, 4:34-53, FIGS. 5a, 7-8; EX1012, Abstract, 6:1-35, FIGS. 2-4). Cartridge-retaining members were often designed to operate in conjunction with a spring or spring-like component. *Id.* (citing EX1006, ¶¶2-3, 23, 31-32, FIGS. 1, 4; EX1010, 2:34-71, FIGS. 1-3; EX1007, 2:30-65, 3:2-20, FIGS. 1-4; EX1013, 6 :19-37, 8:11-19, FIGS. 3-4; EX1014, ¶¶41-42, FIG. 11).

1. Spring Washers

Springs (or spring-like components) often served a variety of functions, including securing adjacent components to one another, and the benefits of such

configurations were well known. EX1004, ¶51 (citing EX1006, ¶¶3, 7; EX1015, ¶¶75-83, 88, 113, 124, 184-203; EX1014, ¶¶41-42; EX1008, 4:1-9, 4:17-23, 5:13-22, FIGS. 1-6). For example, springs were known to provide a straightforward, cost-effective mechanism for securing an inserted component, while providing tolerance for slight manufacturing variations in the component's size. EX1004, ¶52 (citing EX1006, ¶¶2-3; EX1010, 1:75-82; EX1016, 3:17-20, 4:11-13, 4:52-53, FIGS. 2-3; EX1017, ¶49 (stating use of spring is "common in order to equalise length tolerances of the container")). The POSA also understood that spring washers provided the predictable biasing functionality of springs, with additional advantages in certain contexts. EX1004, ¶53 (citing EX1006, ¶¶3, 16-17; EX1015, ¶¶184-203). These included compactness, low-cost manufacturing, and gradual, yet stable, application of biasing force. *Id.* (citing EX1018, ¶70; EX1015, ¶¶200-03, FIGS. 12a-12b; EX1019, ¶55, FIGS. 12A-12B). POSAs understood that these benefits were particularly applicable in drug-delivery devices. *Id.* (citing EX1010, 1:75-82; EX1007, 2:30-65, 3:2-20, FIGS. 1-4; EX1013, 6:19-37, 8:11-19, FIGS. 3-4; EX1014, ¶¶41-42, FIG. 11). The POSA was also familiar with the different types of spring washers commonly used, including curved washers, wave washers, and Belleville washers, and was aware of the various spring characteristics associated with each configuration. EX1004, ¶54 (citing EX1020, 800-02, 854-61,

FIG. 13-2e; EX1021, 501-02; EX1022, 678; EX1023, 221-22; EX1015, ¶¶75, 184-203).

Spring-washer stacking was a common, well-understood technique for fine-tuning the deflection profile of a spring system over a given load range. *Id.*, ¶55. As demonstrated below, the POSA was aware of the various ways in which washers could be stacked (*e.g.*, "in parallel," with curvatures disposed in the same direction, or "in series," with curvatures alternating in direction) and the load-deflection profiles associated with the type of stacking. *Id.* (citing EX1022, 678; EX1021, 501-02).

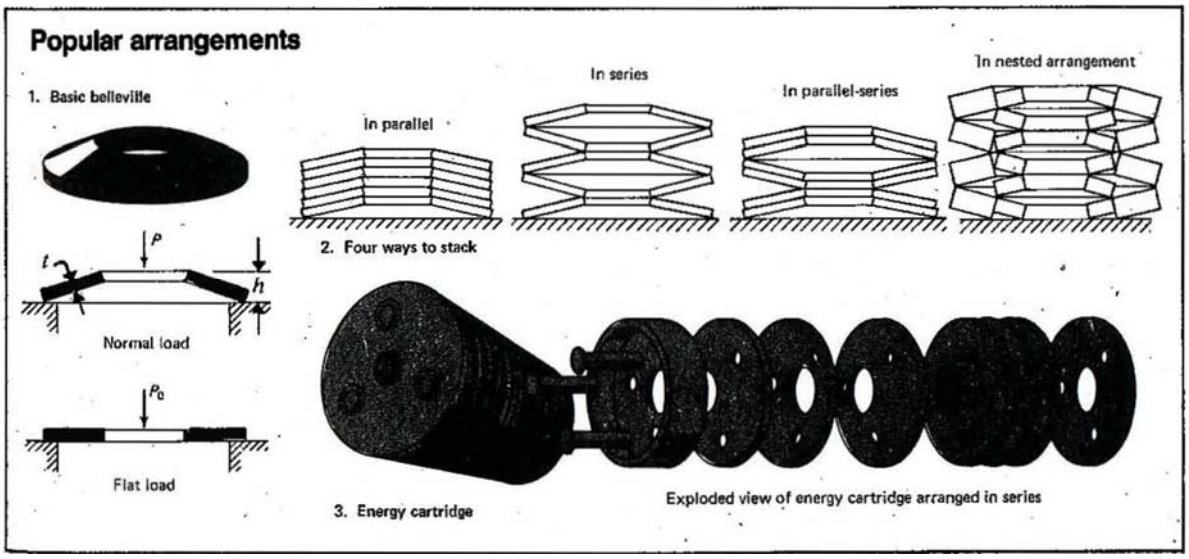

EX1024, 185 (showing popular arrangements of stacked Belleville-washer systems); *see also* EX1004, ¶56 (noting use of stacked spring-washer systems in other applications, including drug-delivery devices) (citing EX1025, 14:1-45,

FIGS. 1A, 3A-C, 7A-F; EX1026, 1:5-10, FIGS. 1-6, 8-10, 11A-B; EX1015, Abstract, ¶¶200-03, FIGS. 12a-12b).

The POSA was aware that spring characteristics could be varied by stacking spring washers, and implementation of such systems was considered routine and predictable. EX1004, ¶55.

2. Fixing Elements

Fixing elements were also routinely used to secure washers against axial and rotational movement. EX1004, ¶57 (citing EX1008, FIGS. 5, 15; EX1027, FIG. 1). Those skilled in the art understood that preventing relative movement of a washer and an adjacent component was often desirable, for example, to generate the spring's biasing force and to prevent wear due to frictional contact. *Id*. (citing EX1006, ¶13; EX1028, 1:9-15, 1:23-26; EX1029, 1:11-22, 1:57-67). The structures used to fix a spring element, such as a spring washer, were familiar to those skilled in the art, and their use was appreciated in the context of drug-delivery devices. *Id.* (citing EX1006, ¶¶13-14, 23, 33, FIGS. 1, 4; EX1013, 6 :19-37, 8:11-19, FIGS. 3-4; EX1007, 2:30-65, 3:2-20, FIGS. 1-4; EX1014, ¶¶41-42, FIG. 11; EX1030, 1:17-25, 20:43-45, 20:54-58, FIG. 16). For example, spring washers including laterally or axially-extending arms or protrusions for fixation to a device were commonplace and well known to those in the field *Id.*, ¶58.

Professor Erdman notes several examples of common fixing-element designs used for spring washers in drug-delivery devices and other mechanical fields:

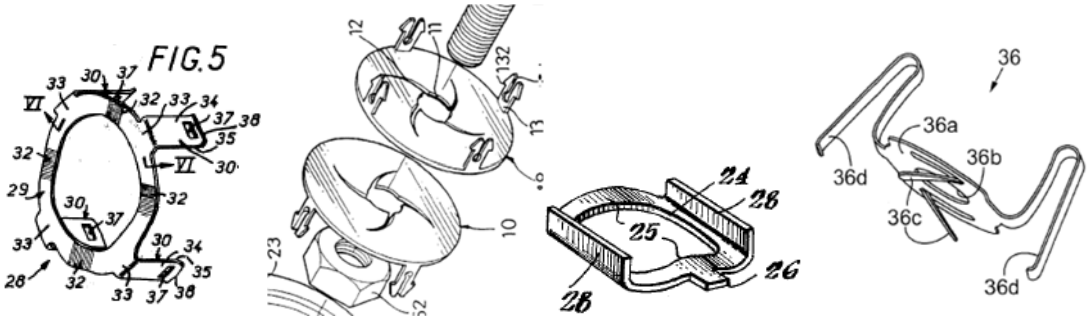

(from left to right) EX1008, FIG. 5; EX1027, FIG. 1 (partial view); EX1007, FIG. 6; EX1013, FIG. 13; *see also* EX1004, ¶58.

Designing a spring washer with fixing elements that engage a component to fix the spring washer in place was routine for a POSA. *See* EX1004, ¶58 (noting known spring washers with single or multiple fixing elements and their types) (citing EX1007, FIGS. 5-6; EX1013, FIGS. 13, 15; EX1008, FIGS. 1, 3, 5-6, 9, 15-16; EX1008, FIGS. 4-5, 13, 15-16; EX1027, FIG. 1). With typical design objectives in mind, the POSA could predictably implement a successful spring-washer system for securing components, like a cartridge, within a drug-delivery device. EX1004, ¶59.

B. Bitdinger

Bitdinger is a prior-art patent under §102(b). Bitdinger was not before the examiner.

Bitdinger teaches medication-delivery pens having reusable body assemblies. EX1009, Abstract, 1:12-17; EX1004, ¶64. Bitdinger particularly teaches a pen having cartridge assembly 14 keyed to pen-body assembly 12. *Id.*, 3:59-65, FIGS. 1-5. Cartridge assembly 14 has two parts: upper-vial retainer 30 and lower-vial retainer 32. *Id.*, 4:30-32, FIGS. 4-5. Lower-vial retainer 32 includes cavity 34 into which drug cartridge 40 is inserted. *Id.*, 4:33-34, 4:46-49, FIGS. 3-5. Proximal end 36B of upper-vial retainer 30 connects the pen-body assembly's distal end, while distal end 36A threadedly engages with proximal end 38A of lower-vial retainer 32. *Id.*, 4:34-37, 5:24-26, FIG. 2.

FIG-4

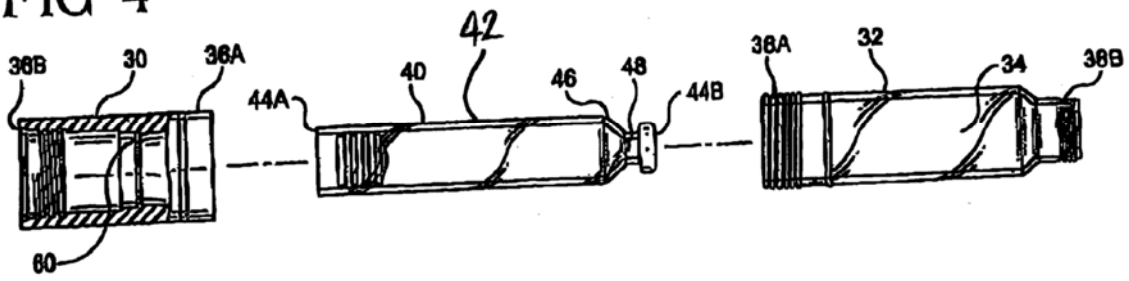

FIG-5

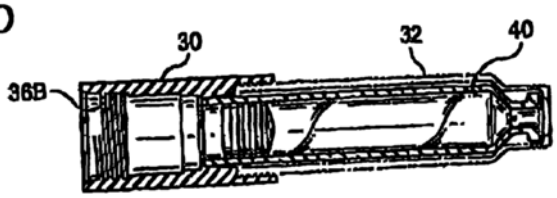

Id., FIGS. 4-5.

With this connection, cartridge 40 is releasably secured and retained within the delivery pen and, once emptied, can be removed so another cartridge may be used with the device. *See id.*, 5:35-42; EX1004, ¶65.

C. Schofield

Schofield is a prior-art publication under §102(b). Schofield was cited in an IDS during reissue prosecution, but it was not applied substantively.

Schofield teaches medicinal injection devices that incorporate "a resilient cushion 14," placed within the proximal end of the device's housing. EX1010, 1:8-17, 1:58-75. The cushion "accommodate[s] varying lengths of cartridges" inserted into the device. *Id.*, 1:75-77. The illustrated cushion is rubber, but Schofield expressly teaches the cushion "may be constituted by a spring loaded metallic washer, or its equivalent." *Id.*, 1:77-80; EX1004, ¶67.

D. De Gennes

De Gennes is a prior-art patent under §102(b). De Gennes was not before the examiner.

De Gennes describes a clutch bearing having resilient cover 28 "suitable for axially fastening together [an] operating element 10 and [a] drive element 11." EX1008, Abstract, 4:1-4; EX1004, ¶71. The cover is a spring washer with alternating resilient support zones 32 that bear on the drive element. *See id.*, 4:21-23, 4:45-54, FIG. 2; *see also id.*, FIG. 5 (below).

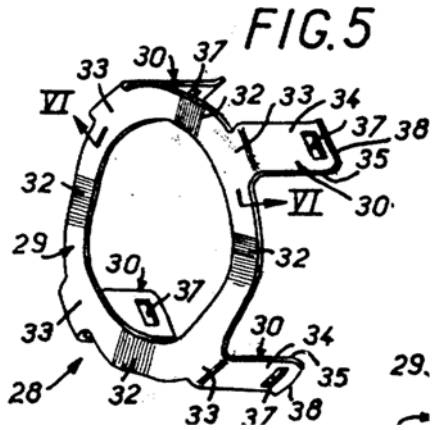

Cover 28 includes axially-extending legs having cutouts 37 that snap-fit onto corresponding claws 20 of reinforcement plate 15, axially and rotationally fixing the components relative to one another. *Id.*, 4:24-28, 4:38-40, 4:59-5:2. De Gennes teaches that this snap-fit engagement grips operating element 10 and drive element 11 together and, due to the washer's resilience, the drive element is fixed axially relative to operating element 10. *Id.*, 1:14-18, 5:14-22; EX1004, ¶72. Professor Erdman explains how De Gennes, while concerned with a clutch bearing, addresses a problem analogous to that addressed in Burren (axially fixation and support of two components relative to one another), and addresses that problem by using a spring washer to exert a biasing force on the components for axial fixation. EX1004, ¶73 (annotating analogous components of De Gennes). As explained above in section VI, given POSAs' familiarity with general spring mechanics and manufacturing and their widespread use for securing components, a POSA would have considered devices like De Gennes, which also incorporates a biasing element, like a spring washer, for a similar function. *Id.*, ¶74.

IX. GROUND 1: CLAIMS 1-18 WERE OBVIOUS OVER BITDINGER, SCHOFIELD, AND DE GENNES

Each of claims 1-18, as a whole, would have been obvious in view of the combined teachings of Bitdinger, Schofield, and De Gennes. As explained above, the independent claims recite a drug-delivery device (or a method of manufacturing such a device) having four main components: (1) a housing for housing internal components of the device; (2) a cartridge containing medicine; (3) a cartridge-retaining member for retaining the cartridge; and (4) a spring washer for biasing the cartridge against the cartridge-retaining member to secure it against movement, where the spring washer includes at least two fixing elements to fix it relative to the housing. *See supra*, §V; EX1004, ¶166.

As shown in the partial, annotated view of FIG. 3 below, Bitdinger teaches an injection pen having four components similar to those claimed by Harms: (1) a pen-body assembly 12 with an upper-vial retainer 32 (purple) for housing internal components of the device; (2) a cartridge 40 (blue) containing medicine; (3) a lower-vial retainer 32 (red) for retaining the cartridge; and (4) an annular stop 60 (green) for securing the cartridge against movement within the lower-vial retainer. *See, e.g.*, *See, e.g.*, EX1009, 3:59-65, 4:30-39, 4:46-49, 4:60-62, 5:1-8, 5:15-18, 5:24-28, FIGS. 1-5; EX1004, ¶167.

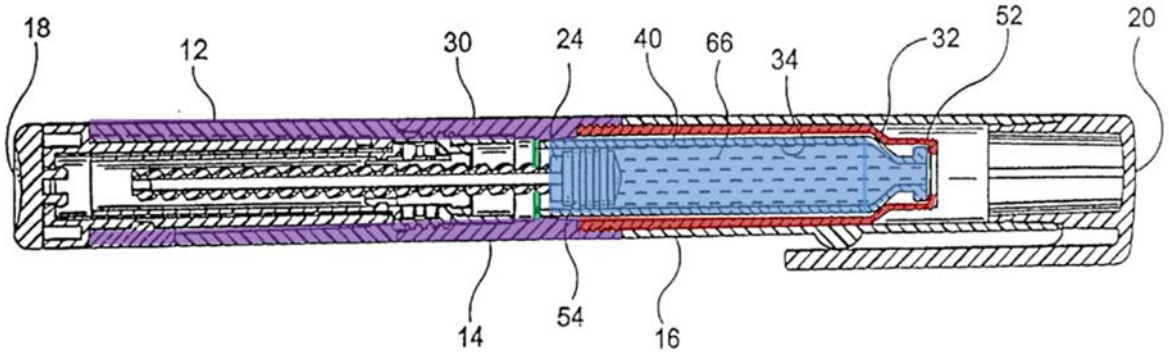

EX1004, ¶167.

To secure and hold the cartridge within the lower-vial retainer, Bitdinger teaches an integrated, annular stop extending from the upper-vial retainer's inner surface, rather than a separate spring washer fixed to the upper-vial retainer using fixing elements. EX1004, ¶168. Nevertheless, as explained below, Schofield and De Gennes demonstrate the well-known and predictable use of spring washers to perform the same compensating function: biasing a component relative to another to axially fix that component within a device. *See* EX1004, ¶¶168-71; *infra*, §IX.A.5-6. Based on the references' combined teachings, a POSA would have recognized that an injection pen like Bitdinger's may be designed and successfully implemented with a spring washer, fixed relative to the upper-vial retainer using at least two fixing elements, to bias and secure cartridges against axial movement within the device. *See* EX1004, ¶¶172-88; *infra*, §IX.C. Thus, the combination of Bitdinger, Schofield, and De Gennes renders the claims obvious.

An element-by-element analysis for the independent claims is provided below, with identical or substantially identical clauses grouped together. This analysis is followed by a discussion of the dependent claims. The citations listed are illustrative, not exhaustive. An explanation of the rationale to combine the references' teachings is then provided.

A. Claims 1 and 16-18

1. Preambles

Harms	Bitdinger, Schofield, and De Gennes
[1.Preamble, 17.Preamble, 18.Preamble] A drug delivery device comprising:	"The present invention generally relates to drug delivery devices, and more specifically relates to disposable, pre-fillable drug cartridge for use with a reusable body portion of an injection device for injecting drugs or medicaments into patients which are commonly known in the field as pens." EX1009, 1:12-17; *see also id.*, Abstract, 3:59-61, FIGS. 1-5; EX1010, 1:8-17, FIGS. 1-3.
[16.Preamble] A method of manufacturing a drug delivery device comprising:	

Claims 1, 17, and 18 are each directed to "[a] drug delivery device," while claim 16 is directed to "[a] method of manufacturing" such a device. EX1004, ¶191. Bitdinger describes reusable injection pens for injecting drugs into patients. EX1009, 1:12-17; *see also id.*, Abstract, 3:59-61, FIGS. 1-5; *see also* EX1010, 1:8-17, FIGS. 1-

3 (similarly describing drug-delivery devices); EX1004, ¶192. Thus, to the extent the preamble is limiting, the combination of Bitdinger, Schofield, and De Gennes teaches the claims' preambles. EX1004, ¶193.

2. Elements 1.1, 16.1, 17.1, and 18.1

Harms	Bitdinger, Schofield, and De Gennes
[1.1, 17.1, 18.1] a housing with a proximal end and a distal end,	"The medication delivery pen of the present invention is illustrated in FIGS. 1 through 5, with the pen being generally designated 10. As shown in FIGS. 1-3, the pen includes a pen body assembly 12, a cartridge assembly 14 an[d] a cap 16, with the cartridge assembly being situated between the body assembly and the cap 16 and typically having sufficient medication for several doses." EX1009, 3:59-65; *see also id.*, 4:4-34, 4:46-57, 4:60-62, FIGS. 1-5.
[16.1] providing a housing with a proximal end and a distal end,	

Each of the claims recites a housing (or providing a housing) having two ends" a "proximal end" and a "distal end." EX1004, ¶194. Bitdinger teaches a medication delivery pen 10 having a pen assembly 12 and a cartridge assembly 14, which includes, in part, an upper-vial retainer 32 (described more below), for holding dose-setting and drive mechanisms for administering medicine from a drug cartridge. *See* EX1009, 3:59-65, 4:10-34, 4:46-47, 4:60-62, FIGS. 1-5. As shown below in FIG. 2, the assembly includes "proximal and distal ends 18 and 20." *Id.*, 4:4-9; EX1004, ¶195.

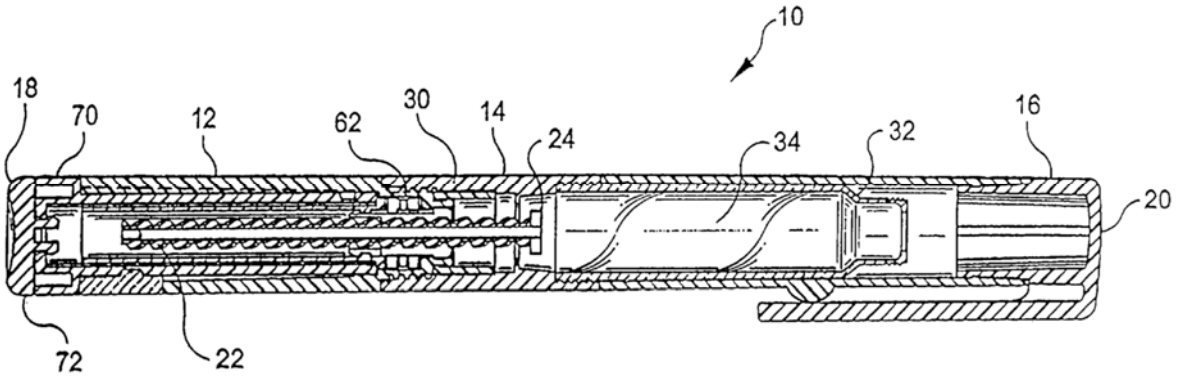

Accordingly, the combination teaches the claimed "housing."

3. Elements 1.2, 16.2, 17.2, and 18.2

Harms	Bitdinger, Schofield, and De Gennes
[1.2, 17.2, 18.2] a cartridge adapted to accommodate a drug,	"The cartridge assembly 14...includes a drug vial or cartridge 40.... Medication is pre-filled into the drug cartridge 40...." EX1009, 4:46-47, 4:60-62, FIGS. 1-5.
[16.2] providing a cartridge adapted to accommodate a drug;	

Each of the claims recites a cartridge (or providing a cartridge) "adapted to accommodate a drug." EX1004, ¶197. The pen of Bitdinger includes a cartridge 40, which is prefilled with medication, making it "adapted to accommodate a drug." *See* EX1009, 4:46-47, 4:60-62, FIGS. 1-5; EX1004, ¶198. The combination thus teaches the claimed "cartridge."

4. Elements 1.3, 16.3, 17.3, and 18.3

Harms	Bitdinger, Schofield, and De Gennes
[1.3] a cartridge retaining member adapted to retain the cartridge, the cartridge retaining member releasably secured to the housing, and	"As shown in FIGS. 1-3, and in greater detail in FIGS. 4 and 5, the cartridge assembly 14 is divided into two parts, i.e., an upper vial retainer 30 and a lower vial retainer 32, with the lower vial retainer defining a vial retaining cavity 34 formed in the lower vial retainer 32. As explained further herein, one end 36A of the upper vial retainer 30 is preferably dimensioned and configured to threadedly engage one end 38A of the lower vial retainer 32...." EX1009, 4:30-37. "The cartridge assembly 14...includes a drug vial or cartridge 40, with the cavity 34 dimensioned and configured to securely receive and retain the drug cartridge therein." *Id.*, 4:46-49; *see also id.*, 5:4-15. "The pen body assembly 12 includes an array of threads 62 for threaded engagement with the threaded other end 36B of the upper vial retainer 30...." *Id.*, 5:24-28. "Preferably, the pen body assembly 12 is reusable and the drug cartridge 40 in the cartridge assembly 14 will contain a volume of medication 66 sufficient
[16.3] providing a cartridge retaining member adapted to retain the cartridge and be releasably secured to the housing, … releasably securing the cartridge retaining member to the housing	
[17.3] a cartridge retaining member adapted to retain the cartridge, the cartridge retaining member is secured to the housing, and	
[18.3] a cartridge retaining member configured to accept and retain the cartridge, the cartridge retaining member is secured to the housing, and	

	for administration of several doses. After exhaustion of the medication 66, the cartridge assembly 14 will be threadedly disengaged from pen body assembly 12 and the drug cartridge 40 discarded. A new assembly containing a drug cartridge may then be mounted to the reusable pen body assembly 12." *Id.*, 5:35-42; *see also id.*, 5:19-23, 6:3-10, FIGS. 1-5.

Each of the claims recites a "cartridge retaining member" or providing such a component, but with two notable differences. EX1004, ¶199. First, elements 1.3, 16.3, and 17.3 recite that the cartridge-retaining member is "adapted to retain" the cartridge, while element 18.3 recites that the component is "configured to accept and retain" the cartridge. Second, elements 1.3 and 16.3 recite the cartridge-retaining member is "releasably secured to the housing," while elements 17.3 and 18.3 recite that it is "secured" to the housing. As explained below, the combination teaches a "cartridge retaining member" having each of the features recited in each of the elements.

Cartridge assembly 14 of Bitdinger has two parts: an upper-vial retainer 30 and a lower-vial retainer 32. EX1009, 4:30-32, FIGS. 1-5. As shown below in FIGS. 4-5, lower-vial retainer 32 includes a cavity 34 that is "dimensioned and configured to securely receive and retain the drug cartridge therein," *id.*, 4:33-34, 4:46-49, making lower-vial retainer 32 a "cartridge retaining member" that is

"adapted to retain" and "configured to accept and retain" cartridge 40 within its cavity." EX1004, ¶200.

FIG-4

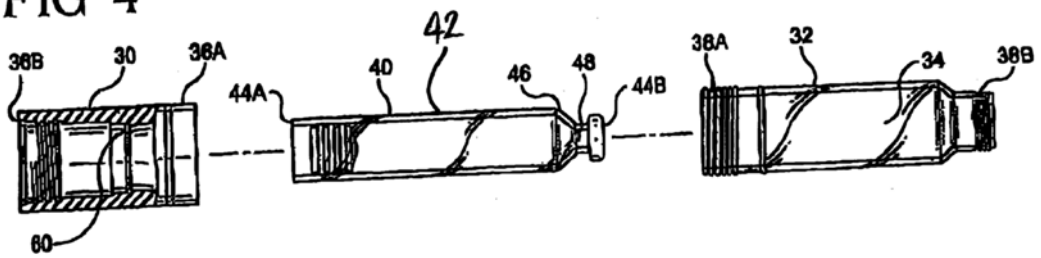

FIG-5

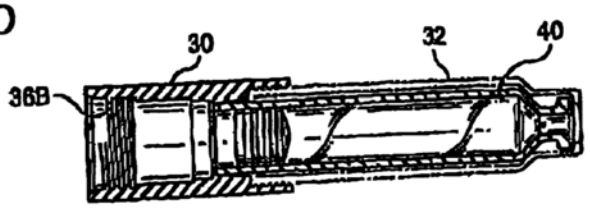

Lower-vial retainer 32 is also "releasably secured" to the housing (the pen-body assembly and upper-vial retainer 30). EX1004, ¶201. Specifically, lower-vial retainer 32 includes a proximal end 38A that threadedly engages a distal end 36A of upper-vial retainer 30. EX1009, 4:34-37, FIGS. 4-5. The upper-vial retainer's proximal end 36B threadedly engages threads 62 on pen-body assembly 12's distal end. *Id.*, 5:24-28. Bitdinger further teaches that, after cartridge 40 is emptied, cartridge assembly 14 is threadedly disengaged from pen-body assembly 12 and discarded, *see id.*, 5:35-42, 6:3-10, making the lower-vial retainer "releasably secured" to the pen-body assembly via the releasable, threaded engagement between the upper-vial retainer and the pen-body assembly. EX1004, ¶201.

Moreover, as explained more in section IX.C below, while Bitdinger states a preference that "vial retainers 30, 32 are permanently secured to one another," EX1009, 5:19-23, a POSA would have also recognized that lower-vial retainer 32 may be releasably, threaded to upper-vial retainer 30, so that a used cartridge may be replaced without disposing cartridge assembly 14. EX1004, ¶201. In either case, because the lower-vial retainer is "releasably secured" to the pen- body assembly and/or the upper-vial retainer, it is also "secured" to the pen-body assembly/upper-vial retainer once threadedly connected or otherwise attached to the components. *Id.*

For means-plus-function interpretation, Bitdinger teaches an equivalent "cartridge retaining member" that performs the same function claimed by Harms as illustrated by the comparison to Harms below. EX1004, ¶202. That is, Bitdinger teaches connecting a separate part—*i.e.*, lower-vial retainer 32, annotated in red in partial FIG. 3 below—to a housing, which accepts and retains a cartridge within that part's inner cavity. *Id.*; *supra*, §VII. As explained above, this part may be releasably secured to the housing using a threaded connection. EX1004, ¶202.

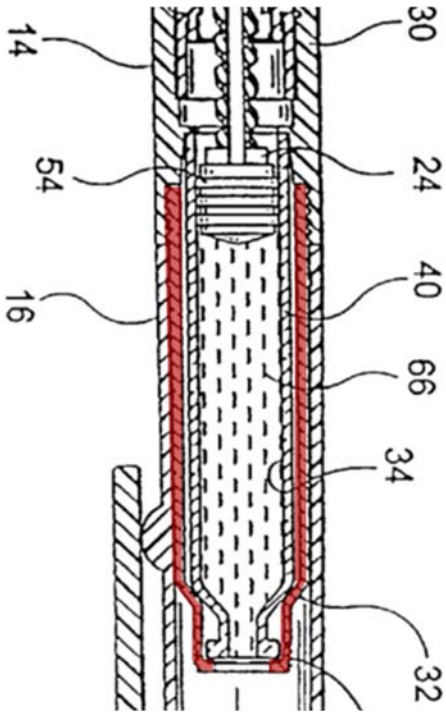

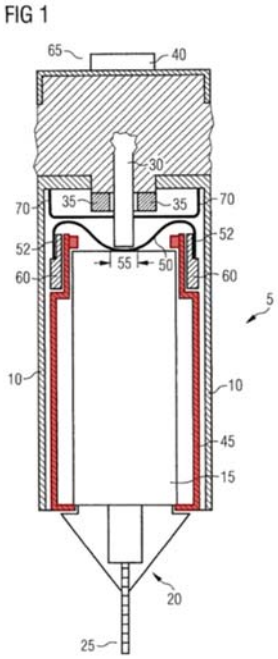

EX1009, FIG. 3 (left, lower-vial retainer 32 annotated red); EX1001, FIG. 1 (right, cartridge retaining member 45 annotated red).

Thus, the combination teaches the claimed "cartridge retaining member."

5. Elements 1.4, 16.4, 17.4, and 18.5[2]

Harms	Bitdinger, Schofield, and De Gennes
[1.4, 17.4] a spring washer arranged within the housing so as to exert a force on the cartridge and to secure the cartridge against movement with respect to the cartridge retaining member,	"The interior of the upper vial retainer 30 includes an inwardly-extending [annular] portion or stop 60 dimensioned to prevent the drug cartridge 40 from moving within the vial retainers 30, 32. In this way, when the drug cartridge 40 is inserted into the cavity 34 and the vial retainers 30, 32 threadedly engaged, the drug cartridge 40 is securely held in the cavity 34 at the open [proximal] end [44A] of the tubular barrel 42 by the [annular] stop 60." EX1009, 5:1-18, FIGS. 4-5; *see also id.*, FIG. 6. ***** "In the construction illustrated the applicator...comprises front and rear frame members 10, 11 interconnected by rods 12 to form an integral structure for housing a cartridge 13." EX1010, 1:58-62; *see also id.*, 1:62-74, FIGS. 1-3.
[16.4] arranging a spring washer within the housing and … , thereby loading the spring washer so as to exert a force on the cartridge and to secure the cartridge against displacement with respect to the cartridge retaining member,	
[18.5] a spring washer…positioned axially within the housing so as to exert a force on the cartridge to secure the cartridge against movement	

[2] Element 18.5 is addressed here due to its similarities with elements 1.4, 16.4, and 17.4. Element 18.4 is addressed below in section IX.A.6.

with respect to the cartridge retaining member,	"The rear member 11 incorporates a resilient cushion 14 to accommodate varying lengths of cartridges. This cushion in the particular form illustrated is of rubber, but it will be [recognized] that it may be constituted by a spring loaded metallic washer, or its equivalent. It is seated within the rear member 11 and abuts against the inner end wall thereof." *Id.*, 1:75-82; *see also id.*, 2:36-66. ***** "[A] cover or connecting member 28 is provided which is suitable for axially fastening together the operating element 10 and the drive element 11; this cover 28 comprises a transverse wall 29 whose overall shape is such as to enable it to form by itself an axially acting resilient means suitable for urging the drive element 11 in the direction of the flange 13...." EX1008, 4:1-8; *see also id.*, 4:17-23, 4:45-51. "Whatever the method of engagement, the cover 28 and the reinforcement plate 15 together grip the drive element 11 and the operating element 10; due to the undulations

	with which it is formed, the transverse wall 29 of the cover 28 elastically presses the outer race 24 of the ball bearing constituting the drive element 11 against the transverse flange 13 of the operating element 10, while by its axial legs 34 the cover 28 secures the reinforcement plate 15, which lines its rear face, to the flange 13." *Id.*, 5:13-22, FIGS. 5, 15.

Elements 1.4, 16.4, and 17.4 recite a "spring washer" (or providing a "spring washer") that is "arranged within the housing." Element 18.5 similarly recites a "spring washer" that is "positioned axially within the housing." Each of the claims recites the spring washer is arranged or positioned "so as to exert a force on the cartridge." For element 16.4, this occurs by securing the cartridge retaining member to the housing, "thereby loading the spring washer." Finally, elements 1.4, 17.4, and 18.5 recites that the spring washer "secure[s] the cartridge against movement with respect to the cartridge retaining member," while element 16.4 recites that the spring washer is secured against "displacement." As explained below, the combination teaches a "spring washer" as recited in the claims. EX1004, ¶204.

The upper-vial retainer of Bitdinger includes "an inwardly-extending annular portion or stop 60 dimensioned to prevent the drug cartridge 40 from moving within the vial retainers 30, 32." EX1009, 5:1-4; *see also id.*, 5:4-18 (stating "[i]n this way,...the drug cartridge 40 is securely held in the cavity 34..."), FIGS.4-5; EX1004, ¶205. Thus, Bitdinger teaches an inwardly-extending annular structure that is "arranged within the housing" (upper-vial retainer 30) and "secure[s] the cartridge against movement with respect to" lower-vial retainer 32. EX1004, ¶205. Professor Erdman explains that, to hold the cartridge securely, the stop must "exert a force on the cartridge." *Id.*

Bitdinger does not explicitly state whether the annular stop, in performing its securing function, may be a resilient structure, like a spring washer, that applies a biasing force on the cartridge. *See* EX1004, ¶206. Nevertheless, as explained in section IX.C, a POSA would have readily appreciated that a spring washer would predictably and beneficially secure the cartridge against movement with respect to the lower-vial retainer. *Id.*

For instance, Schofield demonstrates the known and predictable use of a resilient spring washer to bias and secure a cartridge in a drug-delivery device. *See id.*, ¶¶207-08. Schofield teaches a drug-delivery device with front and rear frame members 10, 11 interconnected by rods 12 (*i.e.*, a "housing") to house a cartridge

13 (*i.e.*, a "cartridge"). EX1010, 1: 58-62, FIGS. 1-3; *see also id.*, 1:62-74 (stating rods may be provided as a tubular structure); EX1004, ¶207.

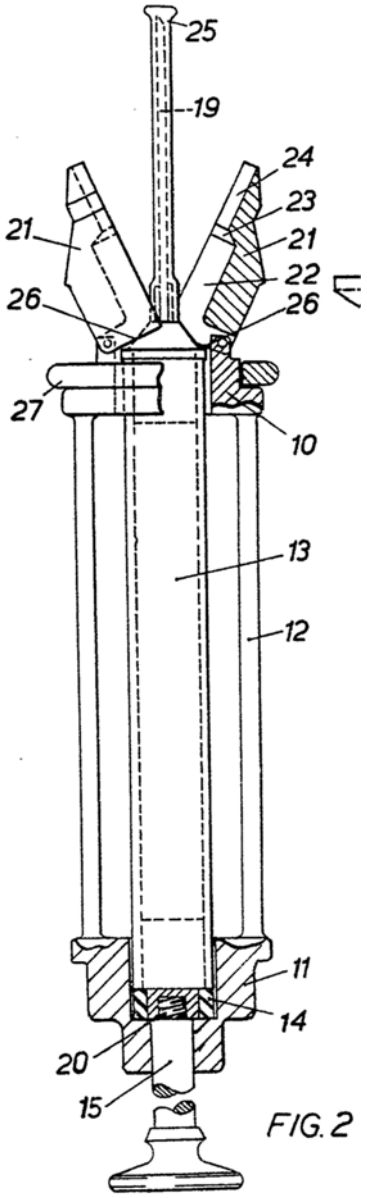

The device's distal end includes a pair of elements 21 (*i.e.* a "cartridge retaining member"), which are hinged to front frame member 10 so that they pivot relative to the housing. EX1010, 2:36-46, FIGS. 1-3; EX1004, ¶208. The device's

proximal end includes a resilient cushion 14 seated within rear member 11. EX1010, 1:75-82. While resilient cushion 14 is illustrated as a rubber, annular-like structure in the embodiment shown, Schofield teaches that the cushion "may be constituted by a spring loaded metallic washer" (*i.e.*, a "spring washer"). *Id.*, 1:77-80. Schofield further teaches that, after inserting cartridge 13 into the device through opened elements 21, a user moves elements 21 into their closed position, which presses the cartridge against resilient cushion 14 (*i.e.*, "thereby loading the spring washer"), thus "ensur[ing] that...the cartridge is firmly held in position." *Id.*, 2:59-66. As a result, a POSA would have understood that the resilient cushion "exert[s] a force on the cartridge" to "secure the cartridge against movement [or displacement] with respect to" elements 21. EX1004, ¶208; *see also* EX1010, 1:75-77 (teaching that, by using the resilient cushion, "varying lengths of cartridges" may be accommodated within the device).

In addition, De Gennes illustrates the common, predictable use of a spring washer to bias components for axial fixation. EX1004, ¶209. In De Gennes' device (a clutch bearing), a cover or connecting member 28 (shown below in FIG. 5) is a spring washer having resilient, undulating support zones 32 that apply a biasing force against an outer race 24 of a drive element 11 to axially fasten (or "secure") an operating element 10 with the drive element. EX1008, 4:1-8, 4:17-23, 4:45-51, 5:13-22, FIGS. 5, 15; EX1004, ¶209.

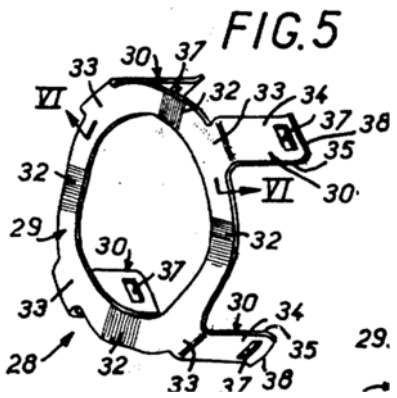

As explained in detail in section IX.C, a POSA would have found it obvious to replace the stop illustrated in Bitdinger with a spring washer, like those De Gennes taught, to provide the same securing function for the cartridge. EX1004, ¶210. Accordingly, the combination teaches the recited "spring washer" of elements 1.4, 16.4, 17.4, and 18.5. EX1004, ¶¶211-12.

6. Elements 1.5, 16.5, 17.5, and 18.4

Harms	Bitdinger, Schofield, and De Gennes
[1.5, 16.5, 17.5] wherein the spring washer has at least two fixing elements configured to axially and rotationally fix the spring washer relative to the housing.	"In the example illustrated, and as can best be seen in FIG. 5, the peripheral skirt 30 of the cover 28 is reduced to at least two legs or tabs 34 which extend axially from the transverse wall of the cover and which alternative circumferentially with gaps 35." EX1008, 4:25-29.
[18.4] a spring washer comprising at least two fixing elements configured to fix the	"In the example illustrated in FIGS. 1 to 6, these legs are four in number and are regularly distributed peripherally...so as to co-operate...with the corresponding fastening claw 20 formed by the free

spring washer from movement with respect to the housing,	end of the corresponding radial extension of the rear reinforcement plate 15 associated with the flange 13. For this purpose each leg 34 of the cover 28 is provided near its free end with a cutout 37 adapted to engage over the corresponding fastening claw 20." *Id.*, 4:30-40; *see also id.*, 4:1-16, 4:55-5:12, 7:26-39, FIGS. 2, 4-5, 15.

Each of the claims recites that the spring washer includes "at least two fixing elements" for fixing the washer relative to the housing. For elements 1.5, 16.5, and 17.5, the fixing elements "axially and rotationally fix the spring washer," while for element 18.4, the fixing elements "fix the spring washer from movement." The combination of Bitdinger, Schofield, and De Gennes teaches the fixing elements recited in the claims. EX1004, ¶213.

As explained above, Bitdinger teaches the use of annular stop to secure the cartridge within the lower-vial retainer. EX1004, ¶214; *supra*, IX.A.5. The annular stop is integrated with the upper-vial retainer's inner surface, making it axially and rotationally fixed to the upper-vial retainer (or "housing"). EX1004, ¶214. In addition, the resilient cushion of Schofield, which performs a similar securing function, abuts against the proximal-end surface of rear member 11, making the cushion axially fixed relative to the rear member. *Id.* While the stop of Bitdinger and the cushion of Schofield do not include "fixing elements," as explained below

in section IX.C, a POSA would have understood that, when using a spring washer in place of Bitdinger's annular stop, the spring washer would need to be fixed in place to effectively bias and secure the cartridge. *Id.* The POSA would have been well aware of the various structures that would fix a spring washer within an injection pen like Bitdinger's, including De Gennes' spring, which exemplifies known fixing elements a POSA would have recognized as beneficial for axially and rotationally fixing a spring washer in a Bitdinger-type device. *See id.*, ¶215; *infra*, §IX.C.

As shown in FIG. 5 below, in De Gennes's device, the spring washer includes at least two axially-extending legs 34, which snap-fit over corresponding fastening claws 20 provided on a reinforcement plate. *See* EX1008, 4:11-16, 4:30-40, 4:55-5:12, FIGS. 2, 4; *see also id.*, 7:26-39, FIG. 15 (showing alternative bayonet-type fixing connection); EX1004, ¶215. As also explained more in section IX.C, a POSA would have understood the legs taught by De Gennes was a form of "fixing elements" that would successfully fix the spring washer to the housing in order to exert its biasing force on the cartridge. EX1004, ¶216. Professor Erdman explains that the POSA would have understood that the snap-fit connection illustrated in De Gennes was commonly used to fix components to one another and would have readily understood its applicability in fixing a similar spring washer within a drug-delivery device. *Id.*; *see also, e.g.*, EX1031, 5.

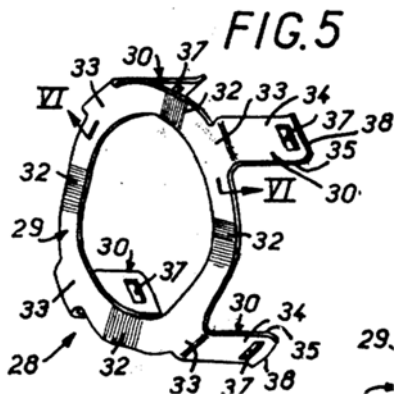

For a possible means-plus-function interpretation, De Gennes teaches one of structures identified by the specification that performs the claimed fixing function of claims 1 and 16-18. EX1004, ¶217; *see also supra*, §VII. That is, De Gennes teaches axially-extending legs that snap-fit onto corresponding protrusions secured to another component. EX1004, ¶217. The POSA would have understood that such a connection would axially and rotationally fix the spring washer to the upper-vial retainer in an injection pen like that of Bitdinger. *Id.*; *infra*, §IX.C. Thus, to the extent the term "fixing elements" is construed under a means-plus-function interpretation, the combination teaches an equivalent to the structure identified in Harms that performs the same claimed function. *Id.*

Accordingly, the combination teaches the claimed "at least two fixing elements."

7. Element 18.6

Element 18.6 recites that the fixing elements "allow axial loading of the spring washer when the cartridge retaining member is secured to the housing,"

which is language similar to that of element 16.4 ("releasably securing the cartridge retaining member to the housing, thereby loading the spring washer"). *Id.*, ¶220. As explained above, by securing the cartridge-retaining member to the housing, the cartridge "loads" the spring washer, which, in turn, exerts the axial-biasing force needed to secure the cartridge. *See supra*, §IX.A.5; EX1004, ¶220. Moreover, for the cartridge to load the spring washer, the POSA would have recognized that the spring washer must be fixed relative to the housing, which would be accomplished using fixing elements like those of De Gennes. EX1004, ¶220; *see also infra*, §IX.C. Due to this fixation, the POSA would have understood that "the fixing elements allow axial loading of the spring washer when the spring washer is secured to the housing." EX1004, ¶220. The combination thus teaches element 18.6.

B. Claims 2-15

Each of the dependent claims depends, directly or indirectly, from claim 1. The references teach the limitations recited by the claims and render the claims obvious.

1. Claim 2

Claim 2 recites "the spring washer is biased so as to exert the force on the cartridge in the distal direction." As explained in sections IX.A.5 and IX.C, a POSA would have sought to substitute the annular stop of Bitdinger's device with

a spring washer that would bias and secure the cartridge relative to the lower-vial retainer. EX1004, ¶222. To effectively secure the cartridge, the POSA would have understood that the spring washer should be "biased so as to exert the force on the cartridge in the distal direction," causing its distal end to abut against the lower-vial retainer. *See, e.g.*, EX1010, 2:59-66, FIGS. 2-3; EX1004, ¶222. Thus, the combination teaches claim 2.

2. Claim 3

Claim 3 recites "the spring washer is secured against axial movement with respect to the housing." As explained in section IX.C, a POSA would have recognized the need to use fixing elements, like those of De Gennes, to axially and rotationally fix the spring washer to the upper-vial retainer. EX1004, ¶223. The POSA would have understood that this would also "secure[] [the spring washer] against axial movement with respect to the housing." *Id.* Thus, the combination teaches claim 3.

3. Claim 4

Claim 4 recites that the drug-delivery device also includes "a piston rod for dispensing a dose of the drug from the device when the piston rod is driven in the distal direction." The spring washer also "comprises an opening" that is "arranged so as to allow the piston rod to run through the opening."

Bitdinger teaches the pen includes a lead screw 22 (a "piston rod") that, when driven in the distal direction, pushes a plunger 54 contained within cartridge 40 to dispense medicine. EX1009, 4:10-29, 4:60-65, 5:51-63, FIGS. 1-3; *see also id.*, 1:66-2:25, 2:32-34 (discussing other prior-art devices); EX1010, 1:85-88, 2:1-10, FIGS. 1-3 (teaching delivery device having ramrod 15 for dispensing medicine); EX1004, ¶224. The stop of Bitdinger includes an opening to allow for the lead screw's axial movement during dose-dispensing. *See* EX1009, 5:1-8, 5:51-54, FIGS. 2-3; EX1004, ¶225. The resilient cushion of Schofield and the spring washer of De Gennes have similar openings for accommodating components, *see, e.g.*, EX1010, 1:75-85, FIGS. 2-3, EX1008, FIGS. 5, 15, and a POSA would have immediately recognized that these openings should be retained when incorporating similar spring washers into Bitdinger's device so as to maintain the lead screw's ability to distally displace the plunger during dose-dispensing. EX1004, ¶225. Thus, the combination teaches claim 4.

4. Claim 5

Claim 5 recites "the spring washer is curved in an axial direction." The spring washer of De Gennes includes curvatures that extend in an axial direction, which a POSA would have understood that, when deflected, applied the washer's biasing force. *See* EX1008, 4:17-23, 4:45-51, 5:35-36, FIGS. 5-6; EX1004, ¶227. The POSA also would have understood that the curvatures should be retained in a

spring washer installed in Bitdinger's device as these curvatures would be necessary for the spring washer to bias and secure the cartridge within the lower-vial retainer. EX1004, ¶227. Thus, the combination teaches claim 5.

5. Claim 6

Claim 6 recites "the spring washer is a Belleville type washer." The POSA was well-aware of spring washers and their various types, including the commonly-used Belleville washer. *See* EX1020, 801-02, 854 (showing Belleville as exemplary spring washer, known in the art since 1867); *supra*, §§VI, VIII.A; EX1004, ¶228. Already familiar with the advantages and tradeoffs of using such a washer to axially secure components, the POSA would have viewed a Belleville washer as an appropriate spring washer that would successfully bias a cartridge within an injection pen and would have considered its use as a compensating spring to be predictable and well-known. *See, e.g.*, EX1020, 854-61 (describing Belleville washers as "extremely compact" and "capable of large push forces," making them ideal "where high loads over small deflections are needed in compact spaces"); further detailing design equations and force-deflection profiles); EX1023, 221-22 (Belleville design considerations and equations); EX1004, ¶¶228-29 (further noting Harms' reliance on POSA's common knowledge of Belleville-washer design and applications). Moreover, a POSA would have also sought to fix a Belleville washer using fixing elements like those taught by De Gennes and

would have predictably implemented such a design for the reasons discussed above. *See supra*, §§IX.A, IX.C; EX1004, ¶229. Accordingly, the combination suggests claim 6.

6. Claims 7-8

Each of claims 7-8 recites that the drug-delivery device also includes "a threaded sleeve member of the housing" to which the spring washer is fixed. Claim 8 recites that the threaded sleeve member is "fixed to the housing."

As explained in section IX.A.4, lower-vial retainer 32 threadedly engages upper-vial retainer 30, which, in turn, threadedly engages pen-body assembly 12. EX1009, 4:34-49, 5:24-28, FIG.2. As shown in partial FIG. 4 below, upper-vial retainer 30 is a sleeve-like, cylindrical component, which a POSA would have understood to be a "threaded sleeve member" that is "fixed to the housing" (*i.e.*, pen-body assembly 12). EX1004, ¶230.

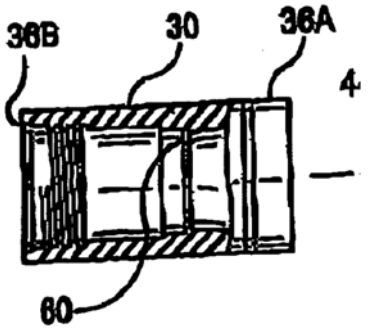

As also explained in sections IX.A.5-6 and IX.C, the POSA would have had reason to structure stop 60 as a spring washer having fixing elements to axially and

rotationally fix the washer to upper-vial retainer 30. EX1004, ¶231. A POSA would have understood this would make the spring washer "fixed to a threaded sleeve member of the housing." *Id.* Thus, the combination teaches claims 7-8.

7. Claim 9

Claim 9 recites the fixing elements "comprise two oppositely disposed fixing elements which extend in the axial direction." De Gennes teaches a spring washer having at least two legs that axially extend from the washer's base. EX1008, 4:25-29, 5:3-4, FIGS. 5, 15. In the illustrated embodiments, the washer includes four legs evenly distributed so that a given leg is oppositely disposed from another. *Id.*, 5:30-32, FIG. 5. A POSA would have understood that this configuration—that is, at least a pair of axially-extending, oppositely-disposed legs—should be retained when fixing a spring washer in Bitdinger's device as doing so would stably support the spring washer within the housing. EX1004, ¶233; *see also supra*, §IX.C. Accordingly, the combination teaches claim 9.

8. Claim 10

Claim 10 recites the fixing elements "are further configured as positioning elements, which keep the spring washer in a determined orientation." A POSA would have understood that fixing elements like those taught by De Gennes would axially and rotationally fix a spring washer when installed within a Bitdinger-type injection pen for securing the cartridge. EX1004, ¶234; *see also supra*, §IX.A.6;

infra, §IX.C. The POSA would have understood that this would also render the fixing elements "positioning elements" that "keep the spring washer in a determined orientation" within the housing. EX1004, ¶234; *cf.* EX1001, 5:44-53 (stating "fixing elements 52 may serve as positioning elements"). The combination thus teaches claim 10.

9. Claim 11

Claim 11 recites the drug-delivery device also includes "a further washer" that is "arranged on the proximal side of the spring washer." Each of the references discusses the use of only one securement element to secure components within a device. Nevertheless, the practice of stacking two or more spring washers to fine-tune the spring characteristics of a spring system was well-understood and predictably implemented by those in the art. EX1004, ¶235; *supra*, §§VI, VIII.A. Professor Erdman notes that Schofield suggests the use of a "spring loaded...washer," which, in addition to suggesting a spring washer as explained above, a POSA would have understood it to suggest more complex stacked-washer system, where, for example, a washer is "spring loaded" with a spring element, like a spring washer. EX1004, ¶235.

Given this knowledge, the POSA would have readily appreciated the beneficial use of, and would have known how to successfully implement, a "further washer" arranged on the proximal side of a spring washer fixed to

Bitdinger's device for securing a cartridge in order to, for example, establish a desired deflection profile of the spring washer over a given load range. EX1004, ¶236. For example, as explained in section VIII.A above, spring washers stacked in parallel were known to permit a greater load over a given deflection. *Id.* The POSA would have understood that this would be desirable for compensating purposes over small distances in order to axially hold the cartridge. *Id.* As also explained in section VIII.A above, the POSA would have known how to predictably implement a stacked spring system in a drug-delivery device. *Id.*

10. Claims 12-14

Claims 12-14 each depends from claim 11. Claim 12 recites the further washer "is a disk washer or a further spring washer having a higher strength as compared to the spring washer." Claims 13-14 recite the further washer is arranged to "limit the loading distance of the spring washer" or "limit deformation of the spring washer to elastic deformation," respectively.

In fine-tuning the spring characteristics of a stacked system, those skilled in the art commonly included spring washers containing different strengths. *See supra*, §VIII.A; EX1004, ¶237. For a stacked system that compensates for length variances among cartridges used in an injection pen, the POSA would have recognized that a "further washer" arranged on the spring washer's proximal side would desirably have a higher strength than the spring washer because such an

arrangement would provide a limit as to the amount of deformation the spring washer would undergo at higher loads, thus preserving the washer's elasticity during use and preventing washer failure due to the application of unnecessarily large loads. EX1004, ¶237. As a result, the POSA would have understood that the higher-strength "further washer" would be arranged to "limit the loading distance of the spring washer" to act as a "backstop" against failure. *Id.* Moreover, because the POSA would have been aware that any deformation of the spring washer should remain within its elastic range, or else washer failure would occur, the "further washer" would also be arranged to "limit deformation of the spring washer to elastic deformation." *Id.* Accordingly, the combination teaches claims 12-14. *Id.*, ¶238.

11. Claim 15

Claim 15, which depends from claim 11, recites the further washer "is curved in an axial direction so as to correspond to a curvature of the spring washer." The POSA was aware of the common practice of stacking spring washers in series where the curvatures of each of the washers ran in the same direction or alternated in direction. EX1004, ¶239; *supra*, §VIII.A. Based on the spring characteristics desired, the POSA would have considered and predictably implemented a stacked system where the washers' curvatures corresponded to one another (*i.e.*, extended in the same direction). EX1004, ¶239. A POSA would have

understood that this would correspond to a system stacked in parallel, which, as explained above, would have been understood to allow for greater loads over a smaller deflection, a characteristic that would have been viewed as desirable for compensating purposes in a drug-delivery device. *Id.* Thus, the combination teaches claim 15.

C. Rationale to combine

As explained above, Bitdinger teaches each of the four primary components Harms claims, except a "spring washer" having "at least two fixing elements" for axially and rotationally fixing the washer relative to the housing. *See* EX1004, ¶¶166-68. Bitdinger specifically teaches an injection pen having annular stop 60 that serves to secure and hold a cartridge within lower-vial retainer 32 during use. *Id.*, ¶168 (citing EX1009, 5:1-18). To secure the cartridge, a POSA would have understood that the annular stop would exert a force on the cartridge's proximal end so that the cartridge's distal end is pushed against the distal end of the lower-vial retainer, preventing movement of the cartridge during use. *Id.*, ¶¶168, 173. The stop of Bitdinger, however, is integrally formed with the upper-vial retainer, and Bitdinger does not explicitly state whether the stop is resilient or whether it could be provided as a separate resilient element, such as a spring washer. *Id.* Nevertheless, a POSA would have had reason to use (1) a spring washer in place of the upper-vial retainer's annular stop for securing a cartridge against axial

movement within a drug-delivery device like Bitdinger's, and (2) at least two fixing elements to axially and rotationally fix the spring washer within the device. *Id.*, ¶¶168-83.

Regarding the first point, both Schofield and De Gennes demonstrate the well-understood and common use of a spring washer to accomplish a securing function similar to that of Bitdinger's stop. *See id.*, ¶¶169-71. For example, in Schofield, the drug-delivery device, like Bitdinger's device, includes four components analogous to those claimed by Harms: (1) front and rear frame members 10, 11 and connecting rods 12 for housing internal components of the device; (2) cartridge 13 for dispensing medicine; (3) pair of elements 21 for retaining the cartridge; and (4) resilient cushion 14, which may be a spring washer, positioned within rear frame member 11. *See id.*, ¶¶169-70 (showing annotated FIG. 2 of Schofield) (citing EX1010, 1:58-82, 2:36-66, FIGS. 1-3). Once a cartridge is inserted and elements 21 are closed, the cartridge is forced in the proximal direction and pushes against resilient cushion 14, which, in turn, exerts a biasing force on the cartridge to cause the cartridge's distal end to abut against closed elements 21, axially securing the components to one another. *Id.*, ¶170. Schofield expressly teaches that this resiliency allows "varying lengths of cartridges" to be accommodated in the drug-delivery device and securely held in place. *Id.*

Similarly, De Gennes further illustrates the ubiquitous and predictable use of spring washers to bias and fix components in mechanical systems. *Id.*, ¶171; *see also id.*, ¶73 (annotating analogous components shown in FIG. 2 of De Gennes, in which spring washer 28 is highlighted green, drive element 11 is highlighted blue, and operating element 10 and reinforcement plate 15 are highlighted red); *supra*, §VIII.A. In De Gennes, as in Schofield, the spring washer, which is axially and rotationally fixed, applies a biasing force on one component to cause it to abut to another, which axially secures the two components together. EX1004, ¶171. Thus, both Schofield and De Gennes demonstrate that a spring washer was a known biasing element capable of securing components within a device.

While Bitdinger acknowledges the need to adequately secure the cartridge using an annular stop that pushes and holds the cartridge against the lower-vial retainer, *see* EX1009, 5:1-18, FIGS. 4-6, EX1004, ¶173, Schofield suggests an additional benefit that is conferred by using a resilient component, like a spring washer, to perform this securing function: adapting to manufacturing tolerances across cartridges, which, absent a resilient feature, could affect the functioning of the device (*e.g.*, poorly supported cartridge due to shorter length; mechanical impairments caused by installation of cartridge of longer length). *See* EX1004, ¶174 (citing EX1010, 1:75-77, 2:59-66; EX1009, 6:52-61, FIG. 8). De Gennes similarly confirms the beneficial use of a spring washer: by applying an adaptable

biasing force, two components may be reliably fixed relative to one another. *See* EX1008, 1:14-18, 4:1-7; EX1004, ¶174. Given these teachings, a POSA would have had reason to use a spring washer in place of the stop in Bitdinger's device as doing so would not only secure the cartridge within the lower-vial retainer, but would also ensure enough flexibility to accommodate longitudinal tolerances associated with cartridges used with the device. EX1004, ¶174.

In addition, as explained in sections VI and VIII.A, a POSA was familiar with other beneficial characteristics associated with spring washers, such as their compactness, substantially uniform force application, and desirable spring-path profile; and the POSA would have recognized that these characteristics were advantageous to performing the same securing function as Bitdinger's stop. EX1004, ¶¶175-79. For instance, as shown below in partial, annotated views of FIGS. 3 (left) and 6 (right) of Bitdinger, the POSA would have appreciated the washer-like features of the stop (annotated green), including a short longitudinal profile and a uniform base for supporting the proximal end of the cartridge.

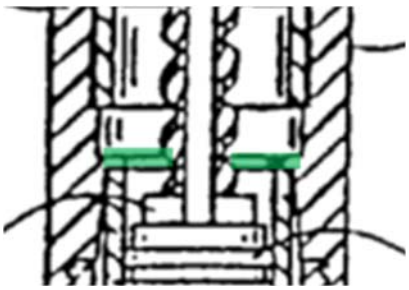

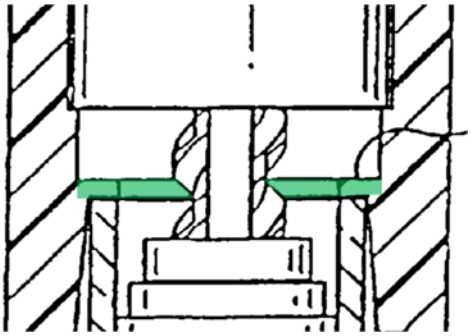

Id., ¶176.

The POSA also would have understood Schofield as similarly teaching an annular-like structure for securing a drug cartridge. *Id.*, ¶177. As illustrated below in partial, annotated views of FIGS. 2 (left) and 3 (right), like Bitdinger's stop, Schofield's resilient cushion 14 also includes a low profile and a uniform base for applying a biasing force on the cartridge to secure it against movement within the device. *See* EX1010, 1:75-82, FIGS. 1-3.

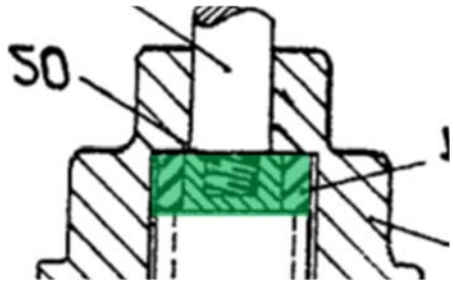

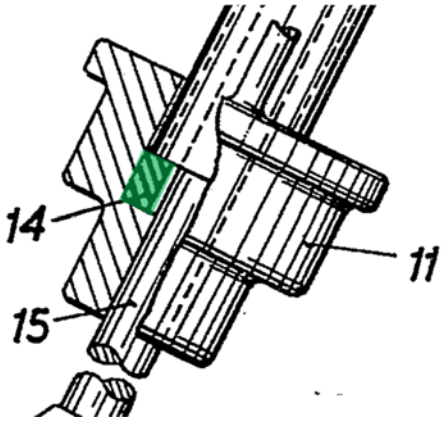

EX1004, ¶177.

The POSA would have appreciated that a spring washer would include analogous structural features, including a short longitudinal profile (which would retain the device's overall compactness) and a washer-like base for applying a substantially even biasing force on a drug cartridge to secure it against movement within a cartridge-retaining member. *See* EX1004, ¶178. Indeed, Schofield expressly recognizes these structural similarities by teaching that the cushion, illustrated as an annular stop-like element, could be formed by "a spring loaded metallic washer, or its equivalent." EX1004, ¶178. And, as Schofield confirms, the

POSA would have understood that a spring washer included a deflection range that could accommodate the range of manufacturing tolerances known to occur across mass-produced cartridges. EX1004, ¶178 (citing, for example, EX1010, 1:75-82; EX1006, ¶17); *see also supra*, §VIII.A.

Given the above, a POSA would have had reason to use a spring washer in place of Bitdinger's stop to hold and secure the cartridge within the lower-vial retainer because the spring washer would perform the same securing function as the stop, but also include the resiliency necessary to accommodate known tolerances among drug cartridges, be capable of deflecting the small distances needed to axially secure a drug cartridge while also maintaining compactness of the device, and apply a sufficiently uniform biasing force on the cartridge. EX1004, ¶179.

In addition, regarding the use of fixing elements, the references appreciate the need for axially fixing a securing component relative to a housing-like structure. EX1004, ¶¶180-81. For instance, as an integrated structure, Bitdinger's stop is axially and rotationally fixed, allowing it to push and hold the cartridge relative to the lower-vial retainer. *See* EX1009, 5:1-4, FIGS. 4-6; EX1004, ¶181. A POSA would have understood that the spring washers of both Schofield and De Gennes are similarly fixed so that an opposing biasing force is exerted when a component, like a cartridge, is pressed against the washer. EX1004, ¶181. For

instance, in Schofield's device, the proximal end of the cushion rests against an inner surface of the rear frame member, causing the cushion to be axially fixed relative to the housing when the cartridge is installed and pushes against the cushion. *See* EX1010, 1:74-77, 2:55-64, FIGS. 2-3; EX1004, ¶181. Similarly, in De Gennes, the spring washer, via its snap-fit connection onto the reinforcement plate, is axially and rotationally fixed relative to the plate. *See* EX1008, 4:55-5:2; EX1004, ¶181. In each of these cases, the POSA would have readily understood why this fixation was necessary: to exert the opposing biasing force necessary to axially fix a component, the spring washer itself must be axially fixed. *See* EX1004, ¶181.

As explained above, the POSA also knew of various structures that would successfully fix a spring washer to the upper-vial retainer and was familiar with the tradeoffs and benefits of each of those connections. EX1004, ¶182; *see also supra*, §§VI, VIII.A. De Gennes, which teaches a snap-fit connection, is one example of a structure that was well-understood and commonly-used for connecting components. EX1004, ¶182. With a snap-fit connection, the POSA would have understood that the spring washer would be axially fixed and, by design, rotationally fixed as well. *Id.* The POSA would have appreciated several benefits arising from such a connection, including ease of assembly and disassembly, *id.* (citing EX1031, 5), and the reduction of overall movement of the spring washer to

minimize wear and risk of failure, *id.*, (citing EX1028, 1:9-15, 1:23-26; EX1029, 1:11-22, 1:57-67). *See also supra*, §VIII.A. Accordingly, for at least these reasons, a POSA would have had reason to fixing elements like those of De Gennes to axially and rotationally fix a spring washer within a Bitdinger-type injection device because the fixing elements would have been understood to (1) provide anchoring support to the spring washer so that it could apply the biasing force necessary to secure the drug cartridge and (2) reduce relative movement between the washer and other components within the device, thus reducing the risk of wear and failure of the washer. EX1004, ¶183.

Finally, a POSA would have had a reasonable expectation of success in using spring washers, as taught by Schofield and De Gennes, having fixing elements like those of De Gennes. EX1004, ¶¶184-88.

The use of springs and their various functions in mechanical systems was well-understood and considered predictable by those in the art. *See* EX1004, ¶185; *supra*, §§VI, VIII.A. In view of the POSA's underlying skill, Professor Erdman explains that, while Schofield and De Gennes show design features specific to their particular use of the spring washer, the POSA, with his own objectives related to using a spring washer in place of a stop in a Bitdinger-type device, would have readily appreciated the features that would need to be adapted or eliminated to successfully implement a spring-washer design. EX1004, ¶185 (addressing specific

examples, such as De Gennes' radial clearance J between the washer's legs and the drive element's outer periphery). Making such adaptions to device-specific washers was considered a routine task by those skilled in the art. *Id.*; *see also supra*, §§VI, VIII.A.

Similarly, while Bitdinger suggests certain preferences for its injection pen, the POSA would not have been deterred from incorporating a spring washer into such a pen. *See* EX1004, ¶¶186-87. For example, Bitdinger suggests a preference for permanently securing the vial retainers 30, 32 so that, once an installed cartridge was emptied, the entire cartridge assembly 14 could be disposed of and replaced. *See* EX1009, 5:19-23. Such a configuration would result in the spring washer, installed in the upper-vial retainer, also being disposed and replaced. EX1004, ¶186. Professor Erdman explains that a POSA would not have viewed such a preference as deterring using a spring washer instead of the annular stop as the POSA would have considered the design of a replaceable spring washer to be a routine task during the normal manufacturing process. *See id.*, ¶186 (explaining POSAs were aware of manufacturing techniques for cheaply producing spring washers, such as metal stamping) (citing, for example, EX1006); *supra*, §§VI, VIII.A. Moreover, the POSA would have viewed such preference to be optional, and, if retaining the spring washer was desired, the POSA would have readily appreciated that the threaded engagement between the vial retainers could remain

releasable, thus retaining the spring washer for continued use. EX1004, ¶186 (noting Bitdinger's acknowledgement of other prior-art injection pens having releasable vial retainers).

Finally, while Bitdinger has an overall aim to reduce the likelihood that an incorrect cartridge is installed in the injection pen, *see, e.g.*, EX1009, 2:46-52, 2:58-63, 2:66-3:2, the POSA would have predictably implemented a spring-washer system that still minimized the risk of cross-installation by fine-tuning the washer such that it compensated for tolerance ranges associated with a specific cartridge-type. EX1004, ¶187; *see also supra*, §§VI, VIII.A (describing spring equations for designing a spring washer having a given deflection profile). Thus, given the above reasons, the POSA would have had a reasonable expectation of success in using a spring washer having at least two fixing elements in place of an annular stop in a Bitdinger-type injection pen. *Id.*, ¶188.

The references thus render all claims obvious.

X. CONCLUSION

The challenged claims are unpatentable. Mylan respectfully requests that IPR be instituted.

Dated: 7 October 2019

/Richard Torczon/
Richard Torczon, Reg. No. 34,448
Counsel for Mylan

CERTIFICATION UNDER 37 C.F.R. §42.24(d)

I certify that the word count for this petition totals 11,266 words.

Dated: 7 October 2019

/Richard Torczon/
Richard Torczon, Reg. No. 34,448

PAYMENT OF FEES UNDER 37 C.F.R. §§ 42.15(A) AND 42.103

The required fees have been paid. If any additional fees are due at any time during this proceeding, the Office is authorized to charge such fees to Deposit Account No. 23-2415.

LIST OF EXHIBITS

Exhibit	Description
1001	U.S. Patent No. RE47,614 - Michael Harms et al. (Issued 09/24/2019)
1002	File History of U.S. Patent RE47,614 (USSN 14/934,406)
1003	File History of USSN 13/123,530 (parent of 14/934,406)
1004	Expert Declaration of Arthur G. Erdman, Ph.D. in Support of Petition for *Inter Partes* Review of U.S. No. Patent RE47,614
1005	*Curriculum Vitae* of Arthur G. Erdman, Ph.D.
1006	U.S. Patent Application Publication No. 2007/0021718, "Plastic Spring" (Burren)
1007	U.S. Patent No. 2,882,901, "Control Syringe Assembly and Attachment" (Venezia)
1008	U.S. Patent No. 4,144,957, "Self-Centering Clutch Bearings" (De Gennes)
1009	U.S. Patent No. 6,648,859, "Disposable, Pre-Filled Drug Cartridge" (Bitdinger)
1010	GB Patent No. 743,839, "Improvements in Or Relating to Devices for Dispensing or Delivering Predetermined Quantities of Liquid from Cartridges or The Like Containers" (Schofield)
1011	U.S. Patent No. 5,279,585, "Medication Delivery Pen Having Improved Dose Delivery Features" (Balkwill)
1012	U.S. Patent No. 5,688,251, "Cartridge Loading and Priming Mechanism for a Pen Injector" (Chanoch)
1013	U.S. Patent No. 6,585,685, "Jet Injector Apparatus and Method" (Staylor)
1014	U.S. Patent Application Publication No. 2004/0035491, "Method and Apparatus for Needle-Less Injection with a Degassed Fluid (Castellano)

1015	U.S. Patent Publication No. 2002/0055734, "Ingestible Device" (Houzego)
1016	U.S. Patent No. 5,891,106, "Syringe" (Butuzov)
1017	U.S. Patent Publication No. 2005/0137571, "Administering Apparatus with a Resettable Activating Block" (Hommann)
1018	U.S. Patent Publication No. 2002/0052595, "Curved Clamp Arm Tissue Pad Attachment for Use with Ultrasonic Surgical Instruments" (Witt)
1019	U.S. Patent Publication No. 2008/0082082, "Surgical Fluid Transfer Apparatus" (Carlyon)
1020	Norton, Robert L. "Machine Design – An Integrated Approach", copyright 2000 Prentice-Hall, 2000 (16 pgs.)
1021	Juvinall, Robert C., et al. "Fundamentals of Machine Component Design", 4th Ed., copyright 2006 John Wiley & Sons, Inc., p.501-502
1022	Shigley-Mischke, "Mechanical Engineering Design", 6th Ed., copyright 2001 McGraw-Hill Ed., p. 678
1023	Spotts, M.F., "Design of Machine Elements", 5th Ed, copyright 1978 Prentice-Hall (6 pgs.)
1024	Chironis, Nicholas P., "Mechanisms & Mechanical Devices Sourcebook" copyright 1991 McGraw-Hill (3 pgs.)
1025	U.S. Patent No. 4,2376,947, "Roller Belleville Spring Damper" (Hebel)
1026	U.S. Patent No. 5,720,683, "Mechanical Chain Tensioner with Belleville Springs" (Patton)
1027	CN2317349Y (Translation), "Bolt Spring Washer with Mortise Cap" (Chen)
1028	U.S. Patent No. 3,233,497, "Spring Finger Retaining Rings" (McCormick)
1029	U.S. Patent No. 6,783,314, "Fastener Device" (Gattone)

1030	U.S Patent No. 8,348,905, “Device for Injecting Apportioned Doses of Liquid Drug” (Radmer)
1031	Snap-Fit Design Manual -Copyright 2007 BASF Corporation (p.24 pgs.)
1032	U.S. Patent No. 6,235,004, “Injection Syringe” (Steenfeldt-Jensen)

CERTIFICATE OF SERVICE

I certify that today this petition and Exhibits EX1001-EX1032 were served by *Priority Mail Express®* on the Patent Owner's correspondence address of record for this patent as follows:

FISH & RICHARDSON P.C.
P.O. Box 1022
Minneapolis, MN 55440-1022

Respectfully submitted,

Dated: 7 October 2019

/Richard Torczon/
Richard Torczon, Reg. No. 34,448